DQ HEATING

DESIGNER RADIATORS & TOWEL RAILS

All prices shown include VAT

Vol.12 | May 2021

Front cover image:
Modus Lacquered Range shown in Bare Metal Lacquer with Enzo Angled TRV in Brushed Nickel

Inside front cover image:
Azura shown in Anthracite 7016 Texture with Essential Angled Valves in Chrome

All prices shown include VAT

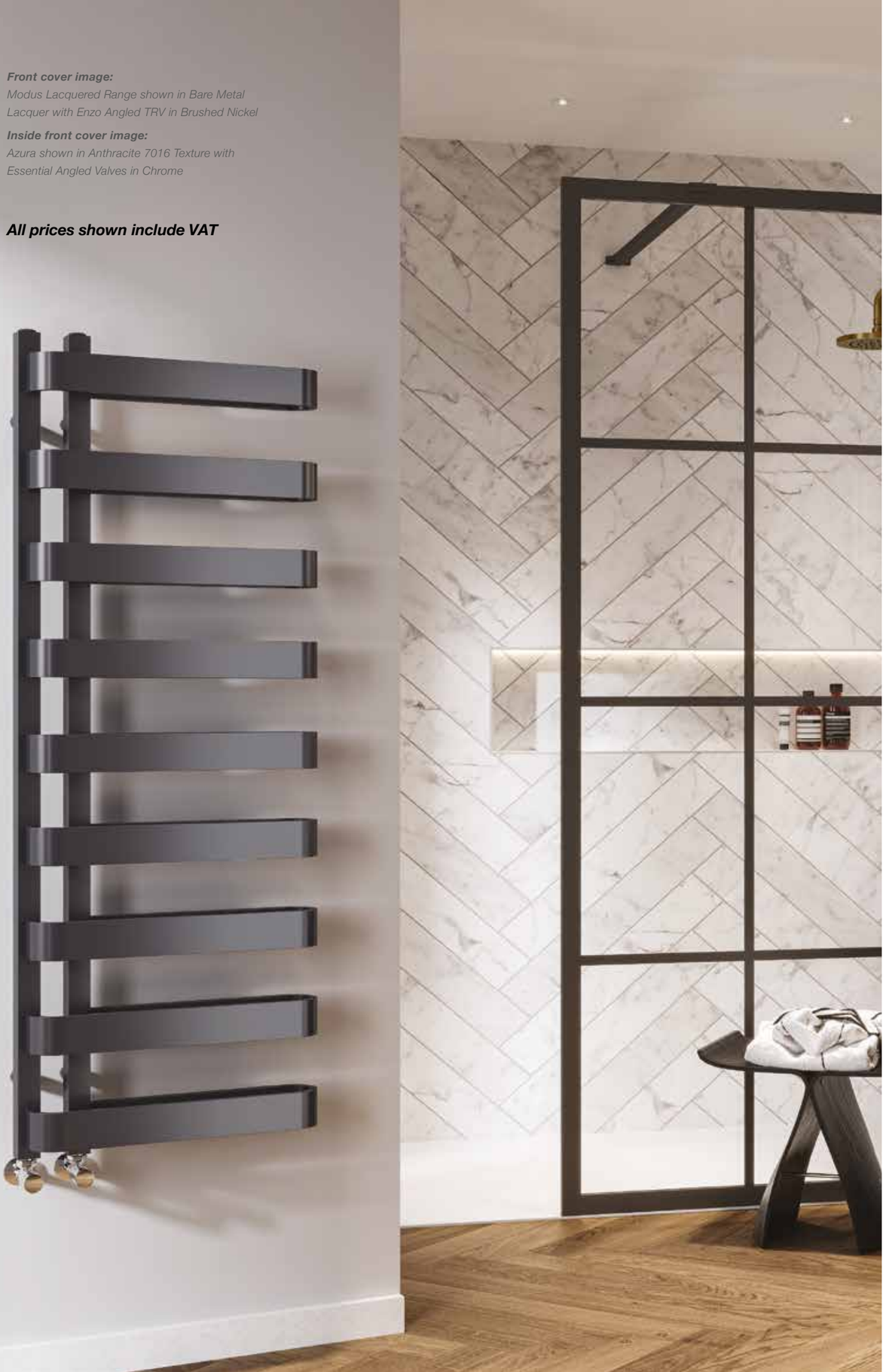

Thetford Forest.

ABOUT US

DQ Heating has been established in the heating industry for over 20 years and is one of the leading suppliers of designer radiators, towel rails and heating accessories in the UK. Our distribution hub & factory is based in the heart of the Thetford Forest in Norfolk, which is the largest lowland pine forest in Britain. Because DQ is family owned and run, we pride ourselves on offering a personal service. Whether you're making an enquiry, have a technical query, placing an order or have a return, we don't like to make things harder than they need to be – our dedicated customer care team is always happy to help.

Distribution Hub

We aim to bring the best selection of designer radiators and towel rails from across the globe to meet your exact requirements at competitive prices. We have over 40,000 stock products in our warehouse that are all available on a next working day delivery service, if ordered before 15:00, and many more that can be quickly supplied in the exact finish you require.

We have a state-of-the-art powder coating facility installed at our factory and with a large range of our product portfolio finished in house, we now have even more control over the quality of the products we supply. This means we also have an even wider selection of our designer radiators and towel rails available in an unlimited array of colours and finishes for you to choose from. However, if you cannot find the colour you require, just contact us and we can find you an alternative.

Our state-of-the art pre-wash cleans all products before powder coating.

We can powder coat large or small volumes with ease.

All products have to pass stringent quality control checks without compromise.

The DQ Pricelist is also available through EQ Software – the market-leading kitchen, bedroom and bathroom industry management software.

Software

marc

INDUSTRY PARTNER

CONTENTS

All prices shown include VAT

DESIGNER COLLECTION

Mild Steel

Vulcano Vertical	4 - 5
Vulcano Horizontal	6 - 7
Cube Vertical	8 - 9
Cube Horizontal	10 - 11
Tornado Vertical	12 - 13
Tornado Horizontal	14 - 15
Tao	16 - 17
Cove Vertical	18 - 19
Cove Horizontal	20 - 21
Cove Mirror	22 - 23
Cassius Vertical	24 - 25
Cassius Horizontal	26 - 27
Drifter	28 - 29
Bosun	30 - 31

Aluminium

Ruvo	32 - 33
Vela	34 - 35

Stainless Steel

Denali	36 - 37
Dune	38 - 39
Delta	40 - 41
Cove Stainless Vertical	42 - 43
Cove Stainless Horizontal	44 - 45

CAST IRON RADIATORS

Cast Iron

2 Column Cast Iron	46 - 47
4 Column Cast Iron	48 - 49
6 Column Cast Iron	50 - 51
Bronte	52 - 53
Loxley	54 - 55

COLUMN RADIATOR COLLECTION

Mild Steel

Modus Stocked Vertical *NEW*	56 - 57
Modus Stocked Horizontal *NEW*	58 - 59
Modus Stocked Lacquered Vertical *NEW*	60 - 61
Modus Stocked Lacquered Horizontal *NEW*	62 - 63
Modus Made to Measure *NEW MODEL*	64 - 69
Bench	70 - 71

TRENCH HEATING

Trench Heating	72 - 73

ELECTRIC HEATING COLLECTION

Vela Electric Wi-Fi *NEW*	74 - 75
Modus Electric *NEW*	76 - 77

BATHROOM COLLECTION

Mild Steel

Azura *NEW*	78 - 79
Tesoro	80 - 81
Stalia	82 - 83
Oakham	84 - 85
Fender	86 - 87
Vulcano T	88 - 89
Cube T	90 - 91
Tornado T	92 - 93
Metro	94 - 95
Orion	96 - 97
Cove TR	98 - 99

Stainless Steel

Austen	100 - 101
Rosa	102 - 103
Cavell	104 - 105
Jango	106 - 107
Rebo	108 - 109
Mahana	110 - 111
Koha	112 - 113
Cove STR	114 - 115
Liana	116 - 117
Siena	118 - 119
Zante	120 - 121

ESSENTIAL TRADITIONAL COLLECTION

Mild Steel

Twyford / Newbury	122 - 123
Hungerford / Eastbury	124 - 125
Lambourne / Sandhurst	126 - 127

LUXURY HANDMADE TRADITIONAL COLLECTION

Brass

Ashill / Ickburgh	128 - 129
Elveden / Methwold	130 - 131
Croxton / Lynford	132 - 133
Hockwold / Cranwich	134 - 135
Old Buckenham / Hilborough	136 - 137

ACCESSORIES

Dual Fuel & All Electric Versions	138 - 140
Essential Radiator Valves	141
Luxury Thermostatic Valves	142 - 143
Luxury Manual Valves	144 - 145
Additional Items & Towel Hanging Options	146 - 148

COLOUR CHARTS & FINISHES

RAL Colours	149
Finishes	150
DQ Cast Iron Finishes	151

TERMS & CONDITIONS

152

MAIN IMAGE: Shown in M02 Historic Copper with Essential Corner TRV in White / Chrome
INSET IMAGE: Shown in Stone Grey RAL 7030

VULCANO

VERTICAL

The Vulcano has a unique shaped tube which delivers excellent 'output for size' and supreme styling, helping establish this radiator as a leading product within the UK. Available in single, double, vertical, horizontal and towel rail versions, with many different size and colour options.

***E:** sales@dqheating.com – **T:** 01842 810833*

LOW WATER CONTENT

MATERIAL
• Mild steel

DELIVERY
• All items 5-7 working days

5 YEAR GUARANTEE

FOR FITTING INSTRUCTIONS VISIT
www.dqheating.com

TECHNICAL INFORMATION
STANDARD CONNECTIONS 1/2”
F = Flow **R** = Return **P** = Plug **V** = Vent

PIPE CENTRES
Vertical = radiator width + valves

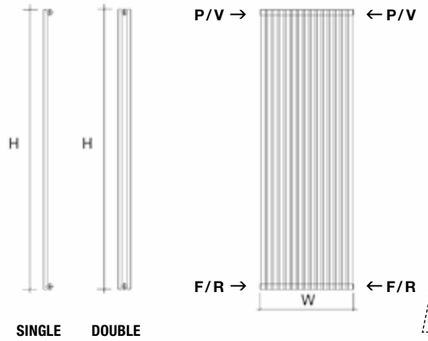

SINGLE
Wall to front face = 98mm
Wall to pipe centre = 60mm

DOUBLE
Wall to front face = 98mm
Wall to pipe centre = 60mm

Model	Height (H) (mm)	Width (W) (mm)	Watts Δt 50°C	Btu's Δt 50°C	White (inc VAT)	F04 – Dark Grey Texture (inc VAT)	RAL Colour / Finishes (inc VAT)	Weight (kgs)
SINGLE								
VUL1 147/10 V	1471	400	850	2900	**£427.20**	**£554.40**	**£554.40**	16
VUL1 147/15 V	1471	600	1275	4350	**£615.60**	**£800.40**	**£800.40**	23
VUL1 177/8 V	1771	320	824	2811	**£430.80**	**£560.40**	**£560.40**	15
VUL1 177/10 V	1771	400	1030	3514	**£496.80**	**£646.80**	**£646.80**	19
VUL1 177/13 V	1771	520	1399	4773	**£632.40**	**£823.20**	**£823.20**	24
VUL1 177/15 V	1771	600	1545	5272	**£756.00**	**£982.80**	**£982.80**	28
VUL1 197/8 V	1971	320	912	3112	**£475.20**	**£618.00**	**£618.00**	16
VUL1 197/10 V	1971	400	1140	3890	**£546.00**	**£709.20**	**£709.20**	21
VUL1 197/13 V	1971	520	1482	5057	**£655.20**	**£852.00**	**£852.00**	27
VUL1 197/15 V	1971	600	1710	5835	**£782.40**	**£1,017.60**	**£1,017.60**	31
DOUBLE								
VUL2 147/8 V	1471	320	1136	3876	**£462.00**	**£600.00**	**£600.00**	24
VUL2 147/10 V	1471	400	1420	4845	**£572.40**	**£744.00**	**£744.00**	30
VUL2 147/13 V	1471	520	1846	6299	**£739.20**	**£960.00**	**£960.00**	39
VUL2 147/15 V	1471	600	2130	7268	**£880.80**	**£1,142.40**	**£1,142.40**	45
VUL2 177/8 V	1771	320	1368	4668	**£576.00**	**£748.80**	**£748.80**	29
VUL2 177/10 V	1771	400	1710	5835	**£699.60**	**£908.40**	**£908.40**	36
VUL2 177/13 V	1771	520	2223	7585	**£927.60**	**£1,206.00**	**£1,206.00**	47
VUL2 177/15 V	1771	600	2565	8752	**£963.60**	**£1,251.60**	**£1,251.60**	54
VUL2 197/8 V	1971	320	1520	5186	**£650.40**	**£846.00**	**£846.00**	32
VUL2 197/10 V	1971	400	1900	6483	**£792.00**	**£1,028.40**	**£1,028.40**	40
VUL2 197/13 V	1971	520	2470	8428	**£950.40**	**£1,234.80**	**£1,234.80**	52
VUL2 197/15 V	1971	600	2850	9724	**£1,095.60**	**£1,423.20**	**£1,423.20**	60
VUL2 197/18 V	1971	720	3420	11669	**£1,310.40**	**£1,704.00**	**£1,704.00**	72
VUL2 197/20 V	1971	800	3800	12966	**£1,455.60**	**£1,891.20**	**£1,891.20**	80

★ *5-7 working days delivery* ★ *Additional sizes available on request*

VALVES & ACCESSORIES
(Please see pages 141-148)

ADDITIONAL EXTRAS:
• *UNDERNEATH CONNECTIONS + £155.00*

AVAILABLE IN THE FOLLOWING FINISHES:

LOW WATER CONTENT

MATERIAL
• Mild steel

DELIVERY
• All items 5-7 working days

5 YEAR GUARANTEE

FOR FITTING INSTRUCTIONS VISIT
www.dqheating.com

MAIN IMAGE:
Shown in Pastel Blue RAL 5024 with Essential Straight Valves in Chrome

INSET IMAGE:
Shown in White RAL 9016

VULCANO

HORIZONTAL

The horizontal version of this distinctive radiator, with u-shaped tubes, is Italian styling at its absolute best – with the white and dark grey texture, in many configurations, available from stock, it's a great addition to the DQ range.

E: *sales@dqheating.com* – ***T:*** *01842 810833*

TECHNICAL INFORMATION
STANDARD CONNECTIONS 1/2”
F = Flow **R** = Return **P** = Plug **V** = Vent

PIPE CENTRES
Horizontal = radiator width - 36mm

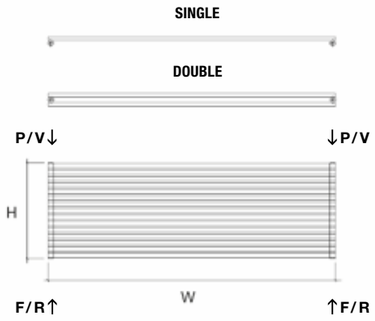

SINGLE
Wall to front face = 107-112mm
Wall to pipe centre = 70-72mm

DOUBLE
Wall to front face = 90mm
Wall to pipe centre = 52mm

Model	Height (H) (mm)	Width (W) (mm)	Watts Δt 50°C	Btu's Δt 50°C	White (inc VAT)	F04 – Dark Grey Texture (inc VAT)	RAL Colour Finishes (inc VAT)	Weight (kgs)
SINGLE								
VUL1 57/13 H	520	571	455	1552	**£290.40**	**£378.00**	**£378.00**	8
VUL1 57/15 H	600	571	525	1791	**£326.40**	**£423.60**	**£423.60**	10
VUL1 72/13 H	520	721	546	1863	**£343.20**	**£446.40**	**£446.40**	10
VUL1 72/15 H	600	721	630	2150	**£378.00**	**£492.00**	**£492.00**	12
VUL1 97/13 H	520	971	728	2484	**£404.40**	**£525.60**	**£525.60**	14
VUL1 97/15 H	600	971	840	2866	**£453.60**	**£588.00**	**£588.00**	16
VUL1 147/13 H	520	1471	1105	3770	**£529.20**	**£686.40**	**£686.40**	20
VUL1 147/15 H	600	1471	1275	4350	**£615.60**	**£800.40**	**£800.40**	23
DOUBLE								
VUL2 57/10 H	400	571	580	1979	**£303.60**	**£394.80**	**£394.80**	12
VUL2 57/13 H	520	571	754	2573	**£366.00**	**£474.00**	**£474.00**	16
VUL2 57/15 H	600	571	870	2968	**£396.00**	**£514.80**	**£514.80**	18
VUL2 72/10 H	400	721	700	2388	**£384.00**	**£498.00**	**£498.00**	15
VUL2 72/13 H	520	721	910	3105	**£435.60**	**£566.40**	**£566.40**	20
VUL2 72/15 H	600	721	1050	3583	**£502.80**	**£651.60**	**£651.60**	23
VUL2 97/10 H	400	971	940	3207	**£514.80**	**£669.60**	**£669.60**	20
VUL2 97/13 H	520	971	1222	4169	**£585.60**	**£760.80**	**£760.80**	26
VUL2 97/15 H	600	971	1410	4811	**£668.40**	**£868.80**	**£868.80**	30
VUL2 147/10 H	400	1471	1420	4845	**£572.40**	**£744.00**	**£744.00**	30
VUL2 147/13 H	520	1471	1846	6299	**£739.20**	**£960.00**	**£960.00**	39
VUL2 147/15 H	600	1471	2130	7268	**£880.80**	**£1,142.40**	**£1,142.40**	45

★ 5-7 working days delivery *★ Additional sizes available on request*

VALVES & ACCESSORIES
(Please see pages 141-148)

AVAILABLE IN THE FOLLOWING FINISHES:

White 9016 | *F04 - Dark Grey Texture* | *RAL Colour page 149* | *Finishes page 150*

LOW WATER CONTENT

MATERIAL
• Mild steel

DELIVERY
• All items in bold 5-7 working days

5 YEAR GUARANTEE

FOR FITTING INSTRUCTIONS VISIT
www.dqheating.com

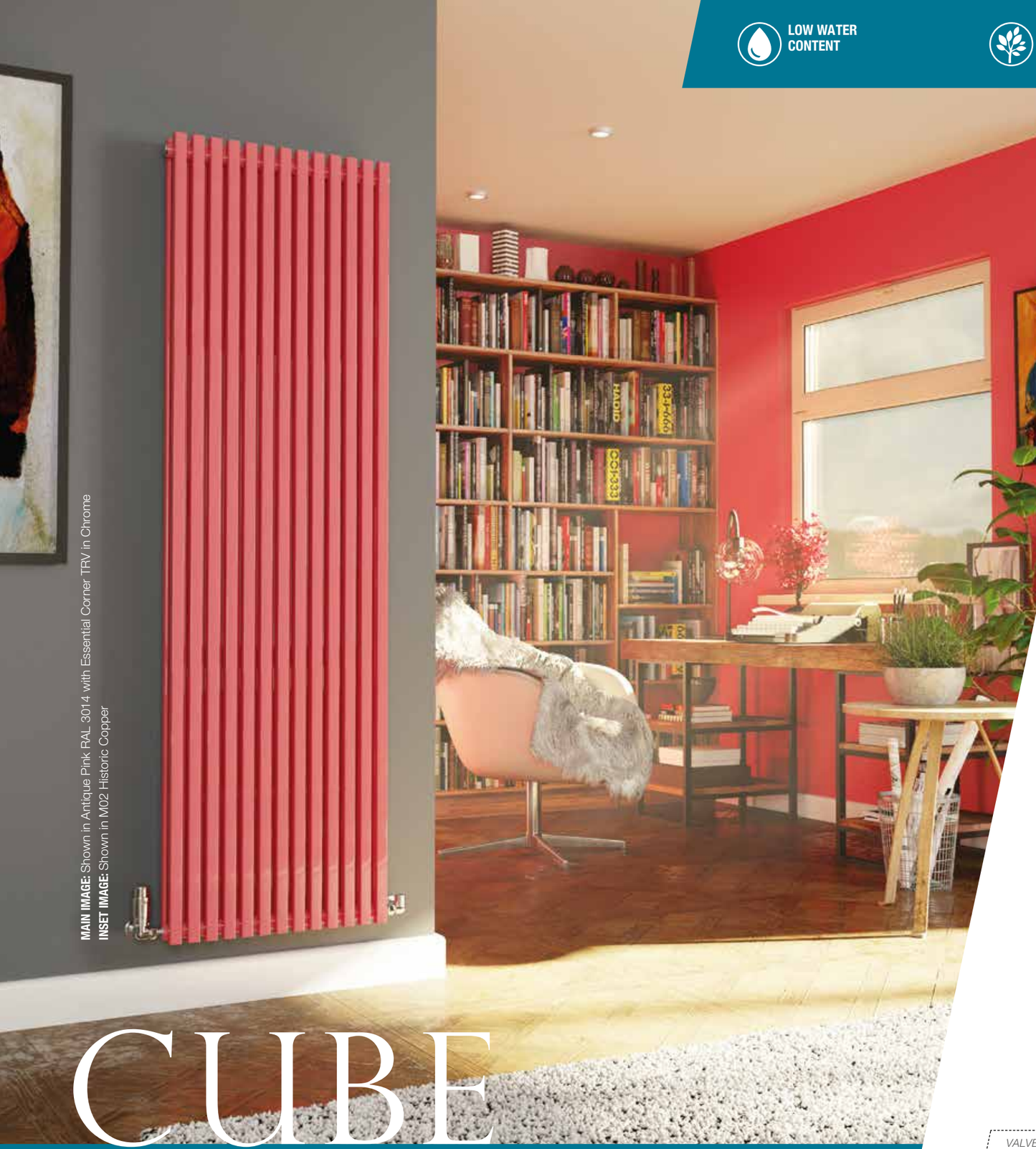

MAIN IMAGE: Shown in Antique Pink RAL 3014 with Essential Corner TRV in Chrome
INSET IMAGE: Shown in M02 Historic Copper

CUBE

VERTICAL

Using similar u-shaped tubes as the Vulcano, this radiator offers exceptional build quality and performance.

TECHNICAL INFORMATION
STANDARD CONNECTIONS 1/2”
F = Flow **R** = Return **P** = Plug **V** = Vent

PIPE CENTRES
Vertical = radiator width + valves

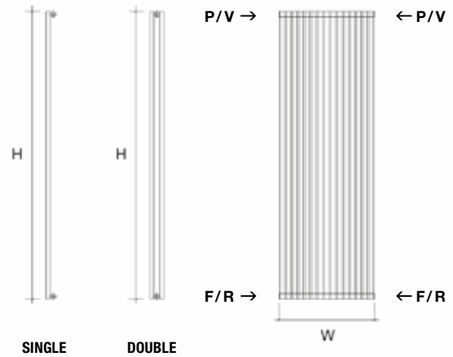

SINGLE
Wall to front face = 100mm
Wall to pipe centre = 60mm

DOUBLE
Wall to front face = 100mm
Wall to pipe centre = 60mm

Model	Height (H) (mm)	Width (W) (mm)	Watts Δt 50°C	Btu's Δt 50°C	White (inc VAT)	F04 – Dark Grey Texture (inc VAT)	RAL Colour / Finishes (inc VAT)	Weight (kgs)
SINGLE								
CUB1 65/10 V	656	400	460	1570	£440.40	£571.20	£571.20	9
CUB1 65/15 V	656	600	690	2354	£532.80	£692.40	£692.40	13
CUB1 147/10 V	1471	400	1060	3617	**£651.60**	**£847.20**	**£847.20**	19
CUB1 147/13 V	1471	520	1378	4702	£805.20	£1,046.40	£1,046.40	24
CUB1 147/15 V	1471	600	1590	5425	£937.20	£1,218.00	£1,218.00	28
CUB1 177/10 V	1771	400	1270	4333	**£756.00**	**£982.80**	**£982.80**	22
CUB1 177/13 V	1771	520	1651	5633	**£963.60**	**£1,251.60**	**£1,251.60**	29
CUB1 177/15 V	1771	600	1905	6500	£1,130.40	£1,470.00	£1,470.00	33
CUB1 197/10 V	1971	400	1420	4845	£836.40	£1,086.00	£1,086.00	25
CUB1 197/13 V	1971	520	1846	6299	£1,003.20	£1,303.20	£1,303.20	32
CUB1 197/15 V	1971	600	2130	7268	£1,166.40	£1,514.40	£1,514.40	37
CUB1 197/18 V	1971	720	2556	8721	£1,328.40	£1,726.80	£1,726.80	44
DOUBLE								
CUB2 65/10 V	656	400	780	2661	£519.60	£674.40	£674.40	16
CUB2 65/13 V	656	520	1014	3460	£589.20	£765.60	£765.60	21
CUB2 72/15 V	721	600	1305	4453	**£765.60**	**£994.80**	**£994.80**	27
CUB2 97/15 V	971	600	1740	5937	**£1,016.40**	**£1,320.00**	**£1,320.00**	36
CUB2 147/10 V	1471	400	1760	6005	**£871.20**	**£1,132.80**	**£1,132.80**	36
CUB2 147/13 V	1471	520	2288	7807	£1,125.60	£1,462.80	£1,462.80	47
CUB2 147/15 V	1471	600	2640	9008	**£1,345.20**	**£1,749.60**	**£1,749.60**	54
CUB2 177/10 V	1771	400	2120	7233	**£1,068.00**	**£1,389.60**	**£1,389.60**	43
CUB2 177/13 V	1771	520	2756	9403	**£1,419.60**	**£1,846.80**	**£1,846.80**	56
CUB2 177/15 V	1771	600	3180	10850	**£1,680.00**	**£2,184.00**	**£2,184.00**	65
CUB2 197/10 V	1971	400	2360	8052	**£1,209.60**	**£1,572.00**	**£1,572.00**	48
CUB2 197/13 V	1971	520	3068	10468	**£1,452.00**	**£1,886.40**	**£1,886.40**	63
CUB2 197/15 V	1971	600	3540	12078	£1,723.20	£2,241.60	£2,241.60	72
CUB2 197/18 V	1971	720	4248	14494	£1,996.80	£2,595.60	£2,595.60	87

All items in bold – 5-7 working days delivery *All items not in bold – 4-6 weeks delivery* *Additional sizes available on request*

VALVES & ACCESSORIES
(Please see pages 141-148)

ADDITIONAL EXTRAS
UNDERNEATH CONNECTIONS + £155.00

AVAILABLE IN THE FOLLOWING FINISHES:

E: sales@dqheating.com – **T:** 01842 810833

MAIN IMAGE: Shown in Traffic Yellow RAL 1023 with Essential Straight Valves in Chrome
INSET IMAGE: Shown in White RAL 9016

CUBE

HORIZONTAL

Many sizes and finishes are available in this superbly manufactured Italian radiator.

E: sales@dqheating.com – **T:** 01842 810833

LOW WATER CONTENT

MATERIAL
• Mild steel

DELIVERY
• All items in bold 5-7 working days

5 YEAR GUARANTEE

FOR FITTING INSTRUCTIONS VISIT
www.dqheating.com

TECHNICAL INFORMATION
STANDARD CONNECTIONS 1/2”

F = Flow **R** = Return **P** = Plug **V** = Vent

PIPE CENTRES
Horizontal = radiator width - 36mm

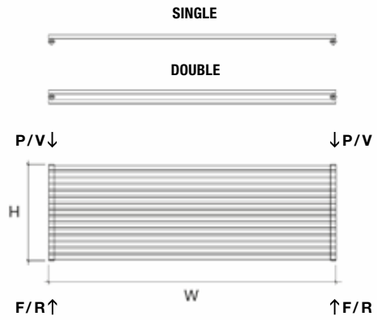

SINGLE
Wall to front face = 112-117mm
Wall to pipe centre = 70-75mm

DOUBLE
Wall to front face = 100mm
Wall to pipe centre = 60mm

Model	Height (H) (mm)	Width (W) (mm)	Watts Δt 50°C	Btu's Δt 50°C	White (inc VAT)	F04 – Dark Grey Texture (inc VAT)	RAL Colour / Finishes (inc VAT)	Weight (kgs)
SINGLE								
CUB1 57/10 H	400	571	410	1399	£409.20	£531.60	£531.60	8
CUB1 57/15 H	600	571	615	2098	£493.20	£640.80	£640.80	12
CUB1 72/10 H	400	721	520	1774	£475.20	£618.00	£618.00	10
CUB1 72/15 H	600	721	780	2661	£577.20	£748.80	£748.80	14
CUB1 97/10 H	400	971	700	2388	£562.80	£732.00	£732.00	13
CUB1 97/15 H	600	971	1050	3583	£690.00	£898.80	£898.80	19
CUB1 147/10 H	400	1471	1060	3617	**£651.60**	**£847.20**	**£847.20**	19
CUB1 147/15 H	600	1471	1590	5425	£937.20	£1,218.00	£1,218.00	28
CUB1 177/10 H	400	1771	1270	4333	**£756.00**	**£982.80**	**£982.80**	22
CUB1 177/13 H	520	1771	1651	5633	**£963.60**	**£1,251.60**	**£1,251.60**	29
CUB1 177/15 H	600	1771	1905	6500	£1,130.40	£1,470.00	£1,470.00	33
CUB1 197/10 H	400	1971	1420	4845	£836.40	£1,086.00	£1,086.00	25
CUB1 197/15 H	600	1971	2130	7268	£1,166.40	£1,514.40	£1,514.40	37
DOUBLE								
CUB2 57/10 H	400	571	680	2320	£598.40	£778.00	£778.00	15
CUB2 57/15 H	600	571	1020	3480	£607.20	£789.60	£789.60	22
CUB2 72/10 H	400	721	870	2968	£701.40	£939.80	£939.80	18
CUB2 72/15 H	600	721	1305	4453	**£765.60**	**£994.80**	**£994.80**	27
CUB2 97/10 H	400	971	1160	3958	£782.40	£1,017.60	£1,017.60	24
CUB2 97/15 H	600	971	1740	5937	**£1,016.40**	**£1,320.00**	**£1,320.00**	36
CUB2 147/10 H	400	1471	1760	6005	**£871.20**	**£1,132.80**	**£1,132.80**	36
CUB2 147/15 H	600	1471	2640	9008	**£1,345.20**	**£1,749.60**	**£1,749.60**	54
CUB2 177/10 H	400	1771	2120	7233	**£1,068.00**	**£1,389.60**	**£1,389.60**	43
CUB2 177/13 H	520	1771	2756	9403	**£1,419.60**	**£1,846.80**	**£1,846.80**	56
CUB2 177/15 H	600	1771	3180	10850	£1,680.00	£2,184.00	£2,184.00	65
CUB2 197/10 H	400	1971	2360	8052	**£1,209.60**	**£1,572.00**	**£1,572.00**	48
CUB2 197/13 H	520	1971	3068	10468	**£1,452.00**	**£1,886.40**	**£1,886.40**	63
CUB2 197/15 H	600	1971	3540	12078	£1,723.20	£2,241.60	£2,241.60	72

All items in bold – 5-7 working days delivery *All items not in bold – 4-6 weeks delivery* *Additional sizes available on request*

VALVES & ACCESSORIES
(Please see pages 141-148)

AVAILABLE IN THE FOLLOWING FINISHES:

White 9016 | *F04 - Dark Grey Texture* | *RAL Colour page 149* | *Finishes page 150*

MAIN IMAGE: Shown in Pastel Turquoise RAL 6034 with Essential Angled Valves in Chrome
INSET IMAGE: Shown in F04 Dark Grey Texture

TORNADO

VERTICAL

This flat profile radiator with a unique shaped rear is available in a massive range of sizes and finishes.

E: *sales@dqheating.com* – ***T:*** *01842 810833*

MATERIAL
• Mild steel

DELIVERY
• All items in bold
5-7 working days

5 YEAR GUARANTEE

FOR FITTING INSTRUCTIONS VISIT
www.dqheating.com

TECHNICAL INFORMATION
STANDARD CONNECTIONS 1/2”
F = Flow **R** = Return **P** = Plug **V** = Vent

PIPE CENTRES
Vertical = radiator width + valves

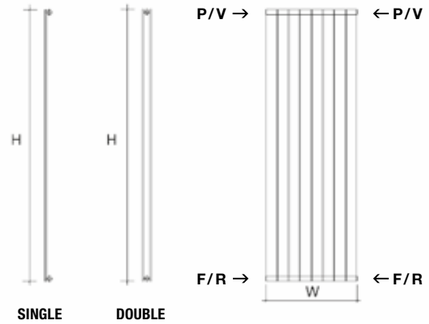

SINGLE
Wall to front face = 90mm
Wall to pipe centre = 60mm

DOUBLE
Wall to front face = 90mm
Wall to pipe centre = 60mm

Model	Height (H) (mm)	Width (W) (mm)	Watts Δt 50°C	Btu's Δt 50°C	White (inc VAT)	F04 – Dark Grey Texture (inc VAT)	RAL Colour / Finishes (inc VAT)	Weight (kgs)
SINGLE								
TOR1 65/6 V	656	456	336	1146	£308.40	£400.80	£400.80	8
TOR1 65/8 V	656	606	448	1529	£386.40	£504.00	£504.00	11
TOR1 147/4 V	1471	306	492	1679	£356.40	£463.20	£463.20	11
TOR1 147/6 V	1471	456	738	2518	**£462.00**	**£601.20**	**£601.20**	17
TOR1 147/8 V	1471	606	984	3357	£541.20	£704.40	£704.40	22
TOR1 177/4 V	1771	306	592	2020	£374.40	£487.20	£487.20	13
TOR1 177/6 V	1771	456	888	3030	**£493.20**	**£640.80**	**£640.80**	20
TOR1 177/8 V	1771	606	1184	4040	£580.80	£756.00	£756.00	27
TOR1 197/4 V	1971	306	664	2266	£414.00	£537.60	£537.60	15
TOR1 197/6 V	1971	456	996	3398	**£532.80**	**£692.40**	**£692.40**	22
TOR1 197/8 V	1971	606	1328	4531	£638.40	£829.20	£829.20	30
TOR1 197/10 V	1971	756	1660	5664	£760.80	£990.00	£990.00	37
DOUBLE								
TOR2 65/6 V	656	456	546	1863	£546.00	£709.20	£709.20	15
TOR2 65/8 V	656	606	728	2484	£678.00	£880.80	£880.80	20
TOR2 147/4 V	1471	306	788	2689	£630.00	£817.20	£817.20	22
TOR2 147/6 V	1471	456	1182	4033	**£823.20**	**£1,069.20**	**£1,069.20**	33
TOR2 147/8 V	1471	606	1576	5377	**£955.20**	**£1,240.80**	**£1,240.80**	43
TOR2 177/4 V	1771	306	952	3248	£660.00	£856.80	£856.80	26
TOR2 177/6 V	1771	456	1428	4872	**£871.20**	**£1,132.80**	**£1,132.80**	39
TOR2 177/8 V	1771	606	1904	6496	**£1,029.60**	**£1,338.00**	**£1,338.00**	52
TOR2 197/4 V	1971	306	1060	3617	£716.40	£932.40	£932.40	29
TOR2 197/6 V	1971	456	1590	5425	**£915.60**	**£1,189.20**	**£1,189.20**	43
TOR2 197/8 V	1971	606	2120	7233	**£1,130.40**	**£1,470.00**	**£1,470.00**	58
TOR2 197/10 V	1971	756	2650	9042	£1,345.20	£1,749.60	£1,749.60	72

★All items in bold – 5-7 working days delivery *★ All items not in bold – 4-6 weeks delivery* *★ Additional sizes available on request*

VALVES & ACCESSORIES
(Please see pages 141-148)

ADDITIONAL EXTRAS:
• UNDERNEATH CONNECTIONS + £155.00

AVAILABLE IN THE FOLLOWING FINISHES:

White 9016 | *F04 - Dark Grey Texture* | *RAL Colour page 149* | *Finishes page 150*

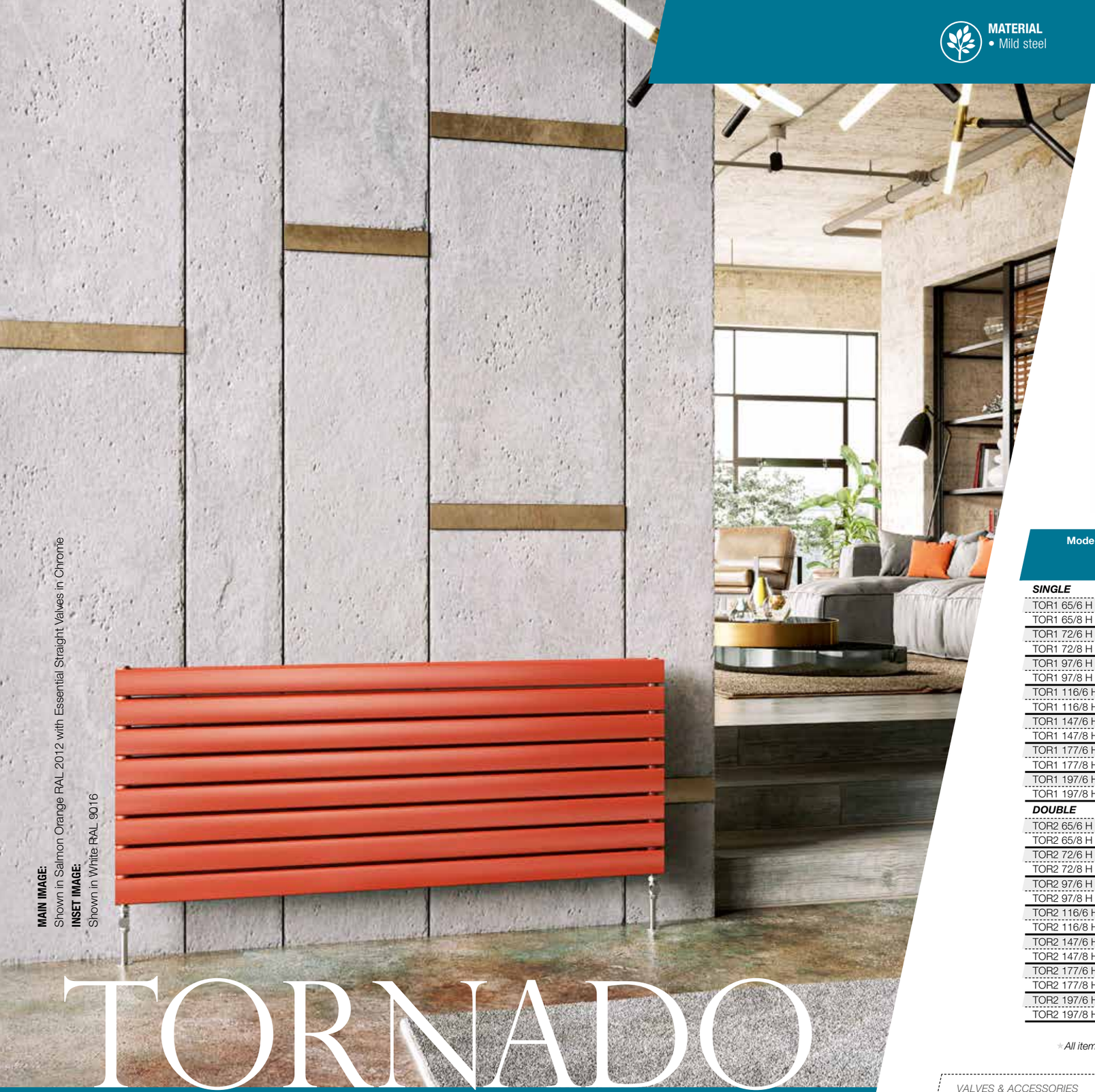

MAIN IMAGE:
Shown in Salmon Orange RAL 2012 with Essential Straight Valves in Chrome
INSET IMAGE:
Shown in White RAL 9016

TORNADO

HORIZONTAL

The Tornado radiator gives you great heat performance and has many options to fulfil your needs.

E: *sales@dqheating.com* – ***T:*** *01842 810833*

MATERIAL
• Mild steel

DELIVERY
• All items in bold
5-7 working days

5 YEAR GUARANTEE

FOR FITTING INSTRUCTIONS VISIT
www.dqheating.com

TECHNICAL INFORMATION
STANDARD CONNECTIONS 1/2”
F = Flow **R** = Return **P** = Plug **V** = Vent

PIPE CENTRES
Horizontal = radiator width - 36mm

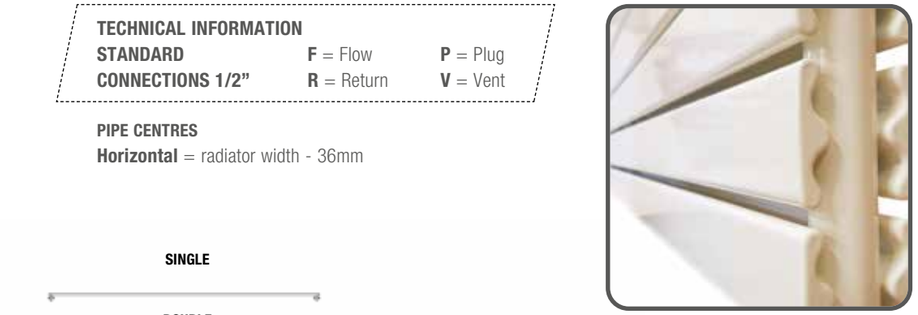

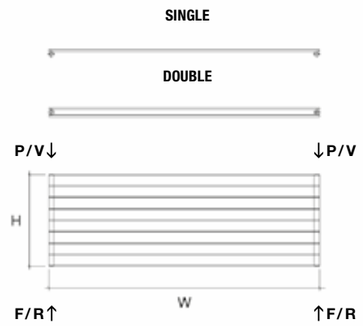

SINGLE
Wall to front face = 103-108mm
Wall to pipe centre = 70-75mm

DOUBLE
Wall to front face = 110mm
Wall to pipe centre = 80mm

Model	Height (H) (mm)	Width (W) (mm)	Watts Δt 50°C	Btu's Δt 50°C	White (inc VAT)	F04 – Dark Grey Texture (inc VAT)	RAL Colour / Finishes (inc VAT)	Weight (kgs)
SINGLE								
TOR1 65/6 H	456	656	336	1146	£308.40	£400.80	£400.80	8
TOR1 65/8 H	606	656	448	1529	£386.40	£504.00	£504.00	11
TOR1 72/6 H	456	721	360	1228	£326.40	£423.60	£423.60	9
TOR1 72/8 H	606	721	480	1638	£392.40	£508.80	£508.80	12
TOR1 97/6 H	456	971	486	1658	£356.40	£463.20	£463.20	11
TOR1 97/8 H	606	971	648	2211	£427.20	£554.40	£554.40	15
TOR1 116/6 H	456	1166	588	2006	£386.40	£504.00	£504.00	14
TOR1 116/8 H	606	1166	784	2675	£466.80	£606.00	£606.00	18
TOR1 147/6 H	456	1471	738	2518	**£462.00**	**£601.20**	**£601.20**	17
TOR1 147/8 H	606	1471	984	3357	£541.20	£704.40	£704.40	22
TOR1 177/6 H	456	1771	888	3030	**£493.20**	**£640.80**	**£640.80**	20
TOR1 177/8 H	606	1771	1184	4040	£580.80	£756.00	£756.00	27
TOR1 197/6 H	456	1971	996	3398	**£532.80**	**£692.40**	**£692.40**	22
TOR1 197/8 H	606	1971	1328	4531	£638.40	£829.20	£829.20	30
DOUBLE								
TOR2 65/6 H	456	656	546	1863	**£546.00**	**£709.20**	**£709.20**	15
TOR2 65/8 H	606	656	728	2484	£678.00	£880.80	£880.80	20
TOR2 72/6 H	456	721	588	2006	**£571.20**	**£744.00**	**£744.00**	16
TOR2 72/8 H	606	721	784	2675	£696.00	£903.60	£903.60	22
TOR2 97/6 H	456	971	786	2682	**£625.20**	**£812.40**	**£812.40**	22
TOR2 97/8 H	606	971	1048	3576	£752.40	£978.00	£978.00	29
TOR2 116/6 H	456	1166	942	3214	**£681.60**	**£886.80**	**£886.80**	26
TOR2 116/8 H	606	1166	1256	4285	£826.80	£1,075.20	£1,075.20	35
TOR2 147/6 H	456	1471	1182	4033	**£823.20**	**£1,069.20**	**£1,069.20**	33
TOR2 147/8 H	606	1471	1576	5377	£955.20	£1,240.80	£1,240.80	43
TOR2 177/6 H	456	1771	1428	4872	**£871.20**	**£1,132.80**	**£1,132.80**	39
TOR2 177/8 H	606	1771	1904	6496	£1,029.60	£1,338.00	£1,338.00	52
TOR2 197/6 H	456	1971	1590	5425	£915.60	£1,189.20	£1,189.20	43
TOR2 197/8 H	606	1971	2120	7233	£1,130.40	£1,470.00	£1,470.00	58

★ *All items in bold – 5-7 working days delivery* ★ *All items not in bold – 4-6 weeks delivery* ★ *Additional sizes available on request*

VALVES & ACCESSORIES
(Please see pages 141-148)

AVAILABLE IN THE FOLLOWING FINISHES:

White 9016 | *F04 - Dark Grey Texture* | *RAL Colour page 149* | *Finishes page 150*

MAIN AND INSET IMAGE:
Shown in Infinity Steel with Essential Corner TRV in White / Chrome

TAO

VERTICAL

The Tao vertical radiator offers durability in both its build quality and finish. The innovation is noticeable thanks to its special finish and the stylish curve to the vertical bars. The modern feel gives you a focal point that will more than satisfy.

E: *sales@dqheating.com* – ***T:*** *01842 810833*

MATERIAL
• Mild steel

DELIVERY
• Next working day

5 YEAR GUARANTEE

FOR FITTING INSTRUCTIONS VISIT
www.dqheating.com

TECHNICAL INFORMATION
STANDARD CONNECTIONS 1/2”
F = Flow **R** = Return **P** = Plug **V** = Vent

PIPE CENTRES = radiator width + valves

SINGLE
Wall to front face = 105mm
Wall to pipe centre = 65mm

DOUBLE
Wall to front face = 105mm
Wall to pipe centre = 65mm

The Tao is manufactured in our “Infinity steel” PVD finish, which stands for physical vapor deposition; a process used to create a very durable, corrosion and tarnish resistant finish. PVD finish is commonly used for bathroom fixtures which are exposed to frequent moisture.

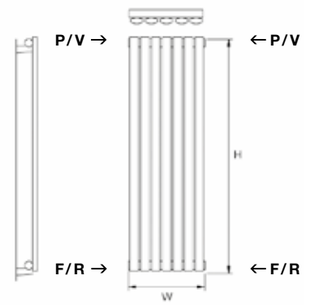

SINGLE VERTICAL

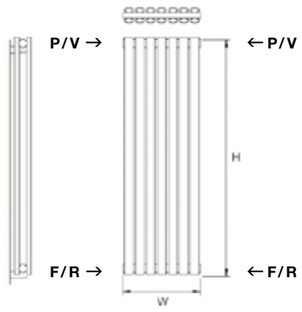

DOUBLE VERTICAL

Model	Height (H) (mm)	Width (W) (mm)	Watts Δt 50°C	Btu’s Δt 50°C	Infinity Steel (inc VAT)	Weight (kgs)
SINGLE						
Tao 150/5	1500	295	530	1808	**£352.80**	14
Tao 150/7	1500	413	750	2559	**£411.60**	19
Tao 180/5	1800	295	640	2184	**£402.00**	15
Tao 180/7	1800	413	895	3054	**£534.00**	20
Tao 180/9	1800	531	1155	3941	**£664.80**	26
DOUBLE						
Tao 150/5D	1500	295	800	2730	**£643.20**	25
Tao 150/7D	1500	413	1130	3856	**£873.60**	35
Tao 180/5D	1800	295	970	3310	**£745.20**	28
Tao 180/7D	1800	413	1350	4606	**£1,009.20**	36
Tao 180/9D	1800	531	1740	5937	**£1,276.80**	50

★ *Next working day delivery*

VALVES & ACCESSORIES
(Please see pages 141-148)

ADDITIONAL EXTRAS:
- *TOWEL BAR TO FIT 295 & 413 WIDE IN CHROME* **+ £63.60**
- *GRIP PEG IN WHITE OR CHROME* **+ £25.20**
- *VIP HOOK IN WHITE OR CHROME* **+ £36.00**

AVAILABLE IN THE FOLLOWING FINISH:

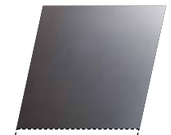

Infinity Steel

MAIN IMAGE: Shown in Red Lilac RAL 4001 with Essential Corner TRV in Chrome
INSET IMAGE: Shown in White RAL 9016

COVE

VERTICAL

Either single or double sided, this superb heat emitter is perfectly proportioned to add style and elegance to any room. With plenty of sizes and finishes available from stock, it is easy to see why it is our best seller.

E: sales@dqheating.com – **T:** 01842 810833

MATERIAL
• Mild steel

DELIVERY
• All items in bold next working day

5 YEAR GUARANTEE

FOR FITTING INSTRUCTIONS VISIT
www.dqheating.com

TECHNICAL INFORMATION
STANDARD CONNECTIONS 1/2”
F = Flow **R** = Return **P** = Plug **V** = Vent

PIPE CENTRES
Vertical = radiator width + valves
Horizontal = radiator width - 45mm

Wall to front face = 105mm
Wall to pipe centre = 65mm

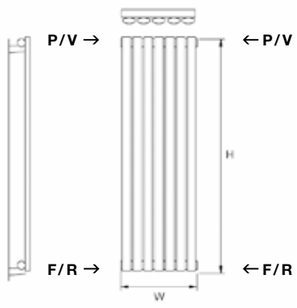

SINGLE VERTICAL

Wall to front face = 105mm
Wall to pipe centre = 65mm

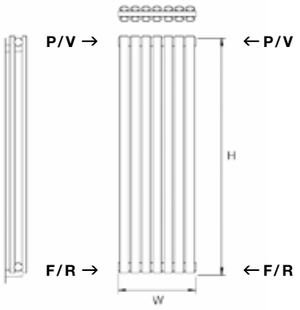

DOUBLE VERTICAL

SINGLE
Wall to front face = 61mm
Wall to pipe centre = 20mm

On the Single Horizontal, only straight valves can be used.

DOUBLE
Wall to front face = 105mm
Wall to pipe centre = 61mm

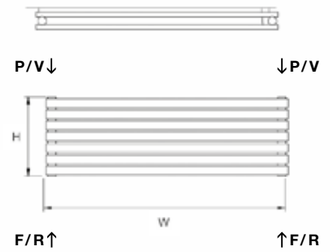

Additional Horizontal Brackets + ***£27.60*** (inc VAT)

Model	Height (H) (mm)	Width (W) (mm)	Watts Δt 50°C	Btu's Δt 50°C	White (inc VAT)	Anthracite 7016 Texture (inc VAT)	RAL Colour Finishes (inc VAT)	Weight (kgs)
SINGLE								
Cove 150/5	1500	295	530	1808	**£151.20**	**£151.20**	£212.40	14
Cove 150/7	1500	413	750	2559	**£201.60**	**£201.60**	£283.20	19
Cove 180/5	1800	295	640	2184	**£170.40**	**£170.40**	£238.80	15
Cove 180/7	1800	413	895	3054	**£226.80**	**£226.80**	£318.00	20
Cove 180/9	1800	531	1155	3941	**£290.40**	**£290.40**	£406.80	26
DOUBLE								
Cove 150/5D	1500	295	800	2730	**£277.20**	**£277.20**	£388.80	25
Cove 150/7D	1500	413	1130	3856	**£378.00**	**£378.00**	£529.20	35
Cove 180/5D	1800	295	970	3310	**£302.40**	**£302.40**	£423.60	28
Cove 180/7D	1800	413	1350	4606	**£422.40**	**£422.40**	£591.60	36
Cove 180/9D	1800	531	1740	5937	**£567.60**	**£567.60**	£794.40	50

All items in bold – Next working day delivery *All items not in bold – 5-7 working days delivery

VALVES & ACCESSORIES
(Please see pages 141-148)

ADDITIONAL EXTRAS:
- *COVE BRACKETS TO HANG VERTICAL RADIATOR HORIZONTAL* + ***£27.60***
- *TOWEL BAR TO FIT 295 & 413 WIDE IN CHROME* + ***£63.60***
- *GRIP PEG IN WHITE OR CHROME* + ***£25.20***
- *VIP HOOK IN WHITE OR CHROME* + ***£36.00***

AVAILABLE IN THE FOLLOWING FINISHES:

MAIN IMAGE: Shown in White RAL 9016 with Jupiter Angled Valves in Brushed Nickel
INSET IMAGE: Shown in Anthracite 7016 Texture

COVE

HORIZONTAL

The Cove horizontal is available in the same range of finishes to match its vertical brother, which gives a massive range to choose from and plenty of options to find the perfect radiator for your home.

E: *sales@dqheating.com* – ***T:*** *01842 810833*

TECHNICAL INFORMATION
STANDARD CONNECTIONS 1/2”
F = Flow **R** = Return **P** = Plug **V** = Vent

PIPE CENTRES
Horizontal = radiator width + valves

Wall to front face = 105mm
Wall to pipe centre = 65mm

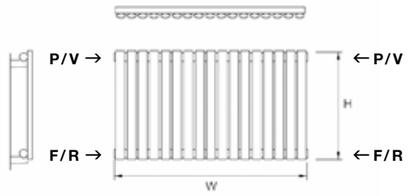

SINGLE HORIZONTAL

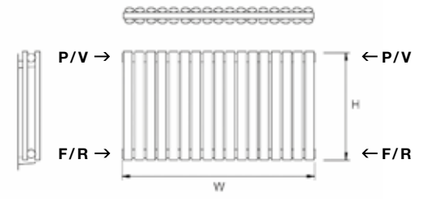

DOUBLE HORIZONTAL

Model	Height (H) (mm)	Width (W) (mm)	Watts Δt 50°C	Btu's Δt 50°C	White (inc VAT)	Anthracite 7016 Texture (inc VAT)	RAL Colour Finishes (inc VAT)	Weight (kgs)
SINGLE								
Cove 550/7	550	413	275	938	**£139.20**	**£139.20**	£194.40	10
Cove 550/10	550	590	390	1331	**£176.40**	**£176.40**	£247.20	12
Cove 550/14	550	826	550	1877	**£234.00**	**£234.00**	£326.40	14
Cove 550/17	550	1003	665	2269	**£290.40**	**£290.40**	£406.80	16
Cove 550/20	550	1180	780	2661	**£327.60**	**£327.60**	£459.60	18
DOUBLE								
Cove 550/7D	550	413	440	1501	**£195.60**	**£195.60**	£273.60	17
Cove 550/10D	550	590	625	2133	**£265.20**	**£265.20**	£370.80	19
Cove 550/14D	550	826	880	3003	**£352.80**	**£352.80**	£494.40	21
Cove 550/17D	550	1003	1065	3634	**£422.40**	**£422.40**	£591.60	24
Cove 550/20D	550	1180	1250	4265	**£486.00**	**£486.00**	£679.20	27

All items in bold – Next working day delivery *All items not in bold – 5-7 working days delivery*

VALVES & ACCESSORIES
(Please see pages 141-148)

ADDITIONAL EXTRAS:
- *TOWEL BAR TO FIT 295 & 413 WIDE IN CHROME* ***+ £63.60***
- *GRIP PEG IN WHITE OR CHROME* ***+ £25.20***
- *VIP HOOK IN WHITE OR CHROME* ***+ £36.00***

AVAILABLE IN THE FOLLOWING FINISHES:

MAIN IMAGE:
Shown in Anthracite 7016 Texture with Jupiter Angled Valves in Brushed Nickel
INSET IMAGE:
Shown in White RAL 9016

COVE

MIRROR

This stunning mirror version of our most popular radiator gives even more versatility and incredible value for money.

E: *sales@dqheating.com* – ***T:*** *01842 810833*

MATERIAL
• Mild steel

DELIVERY
• Next working day

5 YEAR GUARANTEE

FOR FITTING INSTRUCTIONS VISIT
www.dqheating.com

TECHNICAL INFORMATION
STANDARD CONNECTIONS 1/2”
F = Flow **R** = Return **P** = Plug **V** = Vent

PIPE CENTRES
Vertical = radiator width + valves

Wall to front face = 105mm
Wall to pipe centre = 65mm
Width of mirror = 145mm

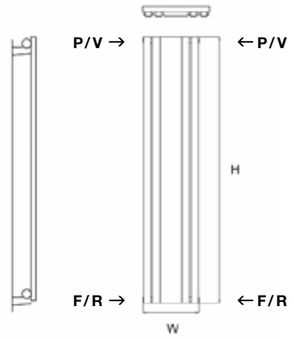

COVE M180/4

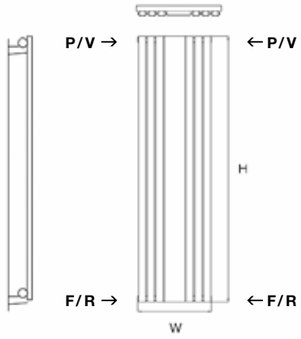

COVE M180/6

Model	Height (H) (mm)	Width (W) (mm)	Watts Δt 50°C	Btu’s Δt 50°C	White (inc VAT)	Anthracite 7016 Texture (inc VAT)	Weight (kgs)
Cove M180/4	1800	382	495	1688	**£294.00**	**£294.00**	15
Cove M180/6	1800	500	850	2900	**£348.00**	**£348.00**	20

★ *Next working day delivery*

VALVES & ACCESSORIES
(Please see pages 141-148)

ADDITIONAL EXTRAS:
- *GRIP PEG IN WHITE OR CHROME* ***+ £25.20***
- *VIP HOOK IN WHITE OR CHROME* ***+ £36.00***

AVAILABLE IN THE FOLLOWING FINISHES:

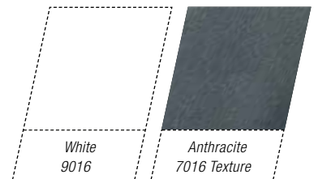

MAIN IMAGE:
Shown in Anthracite 7016 Texture with Essential Corner TRV in Chrome
INSET IMAGE:
Shown in White RAL 9016

CASSIUS

VERTICAL

The Cassius is a smooth, sleek designer radiator that is perfect for any room setting. This vertical version is available in three widths and two finishes as standard, and a horizontal option has also been included in the range, as shown on page 26.

E: *sales@dqheating.com* – ***T:*** *01842 810833*

MATERIAL
• Mild steel

DELIVERY
• All items in bold next working day

5 YEAR GUARANTEE

FOR FITTING INSTRUCTIONS VISIT
www.dqheating.com

TECHNICAL INFORMATION
STANDARD CONNECTIONS 1/2”
F = Flow **R** = Return **P** = Plug **V** = Vent

PIPE CENTRES
Vertical = radiator width + valves

Wall to front face = 115mm
Wall to pipe centre = 70mm

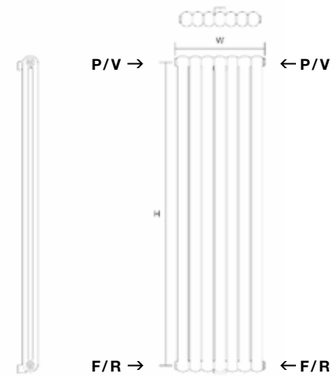

VERTICAL

Model	Height (H) (mm)	Width (W) (mm)	Watts Δt 50°C	Btu's Δt 50°C	White (inc VAT)	Anthracite 7016 Texture (inc VAT)	RAL Colour Finishes (inc VAT)	Weight (kgs)
Cassius 180/3	1800	230	922	3147	**£201.60**	**£201.60**	£283.20	20
Cassius 180/5	1800	370	1538	5245	**£340.80**	**£340.80**	£476.40	35
Cassius 180/7	1800	510	2153	7344	**£466.80**	**£466.80**	£652.80	47

All items in bold – Next working day delivery *All items not in bold – 5-7 working days delivery*

VALVES & ACCESSORIES
(Please see pages 141-148)

ADDITIONAL EXTRAS:
- *SLIP-ON FEET (IN PAIRS)* ***+ £38.40*** *IN WHITE AND ANTHRACITE*
- *TOWEL BAR* ***+ £61.20*** *IN WHITE, CHROME OR ANTHRACITE. SIZES 200mm, 340mm & 480mm.*

AVAILABLE IN THE FOLLOWING FINISHES:

MAIN IMAGE: Shown in White RAL 9016 with Essential Corner TRV in Chrome
INSET IMAGE: Shown in Anthracite RAL 7016 Texture

CASSIUS

HORIZONTAL

The Cassius horizontal is available in the same two finishes as the vertical version, but in a choice of four widths as standard, making this radiator even more versatile.

E: sales@dqheating.com – **T:** 01842 810833

MATERIAL
• Mild steel

DELIVERY
• All items in bold next working day

5 YEAR GUARANTEE

FOR FITTING INSTRUCTIONS VISIT
www.dqheating.com

TECHNICAL INFORMATION
STANDARD CONNECTIONS 1/2”
F = Flow **R** = Return **P** = Plug **V** = Vent

PIPE CENTRES
Vertical = radiator width + valves

Wall to front face = 115mm
Wall to pipe centre = 70mm

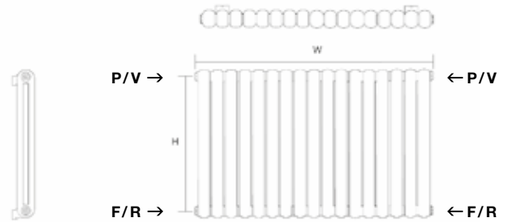

HORIZONTAL

Model	Height (H) (mm)	Width (W) (mm)	Watts Δt 50°C	Btu's Δt 50°C	White (inc VAT)	Anthracite 7016 Texture (inc VAT)	RAL Colour Finishes (inc VAT)	Weight (kgs)
Cassius 550/7	550	507	505	1722	**£219.60**	**£219.60**	£308.40	17
Cassius 550/11	550	785	793	2706	**£340.80**	**£340.80**	£476.40	27
Cassius 550/14	550	993	1009	3444	**£439.20**	**£439.20**	£614.40	35
Cassius 550/17	550	1202	1210	4128	**£526.80**	**£526.80**	£738.00	42

★ All items in bold – Next working day delivery *★ All items not in bold – 5-7 working days delivery*

VALVES & ACCESSORIES
(Please see pages 141-148)

ADDITIONAL EXTRAS:
• *SLIP-ON FEET (IN PAIRS)* ***+ £38.40***
IN WHITE AND ANTHRACITE

AVAILABLE IN THE FOLLOWING FINISHES:

White 9016 | *Anthracite 7016 Texture* | *RAL Colour page 149* | *Finishes page 150*

MAIN IMAGE:
Shown in Pure Orange RAL 2004 with Essential Straight Valves in Chrome
INSET IMAGE:
Shown in White Aluminium RAL 9006 Matt

DRIFTER

VERTICAL & HORIZONTAL

A slim, stylish flat panel radiator with clean lines and a subtle ridge that gives a distinguished contemporary feel. This low water content radiator can transform any room in the house with its classy design.

E: *sales@dqheating.com* – **T:** *01842 810833*

LOW WATER CONTENT

MATERIAL
• Mild steel

DELIVERY
• All items in bold next working day

5 YEAR GUARANTEE

FOR FITTING INSTRUCTIONS VISIT
www.dqheating.com

TECHNICAL INFORMATION
STANDARD **F** = Flow
CONNECTIONS 1/2” **R** = Return

PIPE CENTRES
Vertical = radiator width - 70mm
Horizontal = radiator width - 70mm

Wall to front face = 70-78mm
Wall to pipe centre = 45-53mm

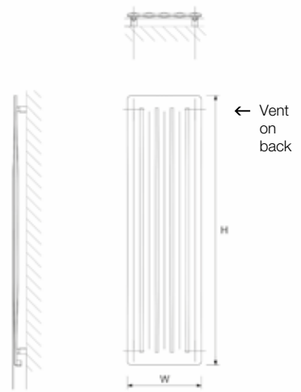

VERTICAL

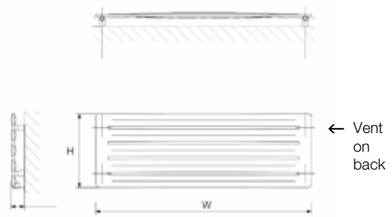

HORIZONTAL

Model	Height (H) (mm)	Width (W) (mm)	Watts Δt 50°C	Btu’s Δt 50°C	White (inc VAT)	RAL 9006 Matt (inc VAT)	RAL Colour Finishes (inc VAT)	Weight (kgs)
VERTICAL								
Drifter 150/4 V	1500	325	446	1522	**£816.00**	**£816.00**	£1,062.00	15
Drifter 150/5 V	1500	410	558	1904	**£856.80**	**£856.80**	£1,113.60	18
Drifter 180/4 V	1800	325	526	1795	**£877.20**	**£877.20**	£1,141.20	18
Drifter 180/5 V	1800	410	657	2242	**£938.40**	**£938.40**	£1,219.20	22
HORIZONTAL								
Drifter 90/4 H	325	900	290	989	**£735.60**	**£735.60**	£956.40	9
Drifter 120/5 H	410	1200	485	1655	**£814.80**	**£814.80**	£1,059.60	15
Drifter 150/5 H	410	1500	582	1986	**£856.80**	**£856.80**	£1,113.60	18
Drifter 180/5 H	410	1800	720	2457	**£938.40**	**£938.40**	£1,219.20	22

** All items in bold – Next working day delivery* ** All items not in bold – 5-7 working days delivery*

VALVES & ACCESSORIES (Please see pages 141-148)

AVAILABLE IN THE FOLLOWING FINISHES:

MAIN IMAGE:
Shown in Grey Aluminium RAL 9007 with Essential Corner TRV in Chrome
INSET IMAGE:
Shown in Oyster White RAL 1013

BOSUN

VERTICAL & HORIZONTAL

The Bosun is from the same family as the versatile Vulcano products. These lower water content radiators deliver excellent output for size, and the larger 35mm unique shaped tubes add a different dimension to the styling of this exceptional product range.

E: *sales@dqheating.com* – ***T:*** *01842 810833*

LOW WATER CONTENT

MATERIAL
• Mild steel

DELIVERY
• All items 5-7 working days

5 YEAR GUARANTEE

FOR FITTING INSTRUCTIONS VISIT
www.dqheating.com

TECHNICAL INFORMATION
STANDARD CONNECTIONS 1/2”
F = Flow **R** = Return **P** = Plug **V** = Vent

PIPE CENTRES
Vertical = radiator width + valves
Horizontal = radiator width - 35mm

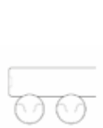

SINGLE VERTICAL
Wall to front face = 105mm
Wall to pipe centre = 55mm

SINGLE HORIZONTAL
Wall to front face = 120-125mm
Wall to pipe centre = 70-75mm

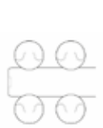

DOUBLE VERTICAL
Wall to front face = 105mm
Wall to pipe centre = 55mm

DOUBLE HORIZONTAL
Wall to front face = 130mm
Wall to pipe centre = 80mm

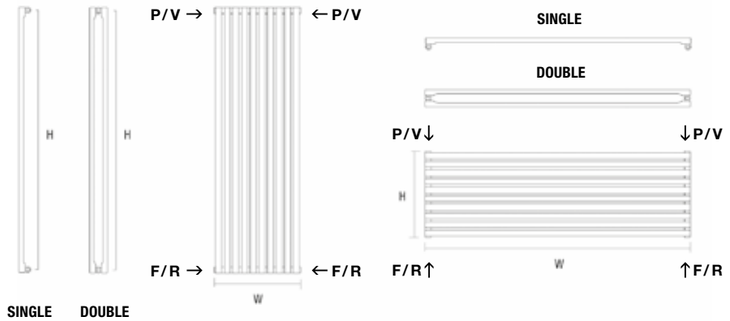

Model	Height (H) (mm)	Width (W) (mm)	Watts Δt 50°C	Btu's Δt 50°C	White (inc VAT)	F04 – Dark Grey Texture (inc VAT)	RAL Colour / Finishes (inc VAT)	Weight (kgs)
VERTICAL SINGLE								
BOS1 180/6 V	1800	300	647	2208	**£520.80**	**£675.60**	**£675.60**	12
BOS1 180/10 V	1800	500	1078	3678	**£741.60**	**£963.60**	**£963.60**	20
VERTICAL DOUBLE								
BOS2 180/6 V	1800	300	1047	3572	**£681.60**	**£886.80**	**£886.80**	23
BOS2 180/10 V	1800	500	1745	5954	**£1,066.80**	**£1,386.00**	**£1,386.00**	40
HORIZONTAL SINGLE								
BOS1 180/6 H	300	1800	647	2208	**£520.80**	**£675.60**	**£675.60**	12
BOS1 180/10 H	500	1800	1078	3678	**£741.60**	**£963.60**	**£963.60**	20
HORIZONTAL DOUBLE								
BOS2 60/10 H	500	600	633	2160	**£484.80**	**£630.00**	**£630.00**	14
BOS2 100/10 H	500	1000	1004	3426	**£744.00**	**£966.00**	**£966.00**	21
BOS2 150/10 H	500	1500	1467	5005	**£912.00**	**£1,185.60**	**£1,185.60**	31

★ 5-7 working days delivery *★ Additional sizes available on request*

VALVES & ACCESSORIES (Please see pages 141-148)

AVAILABLE IN THE FOLLOWING FINISHES:

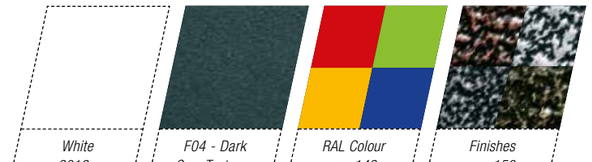

White 9016 | *F04 - Dark Grey Texture* | *RAL Colour page 149* | *Finishes page 150*

LOW WATER CONTENT

MATERIAL
• Aluminium

DELIVERY
• All items in bold next working day

5 YEAR GUARANTEE

FOR FITTING INSTRUCTIONS VISIT
www.dqheating.com

MAIN IMAGE:
Shown in Turquoise Blue RAL 5018 with Essential Corner TRV in White / Chrome
INSET IMAGE:
Shown in Light Blue RAL 5012

RUVO

VERTICAL

The stylishly Italian designed Ruvo is manufactured from 100% recycled aluminium. This material gives you the benefits of heating up quickly, a high heat output and a low water content. With its flowing lines and attention to detail, this ethical product simultaneously offers sustainability without compromising on style.

***E:** sales@dqheating.com – **T:** 01842 810833*

TECHNICAL INFORMATION
STANDARD CONNECTIONS 1/2”
F = Flow **R** = Return
P = Plug **V** = Vent

Wall to front face = 110mm
Wall to pipe centre = 25mm

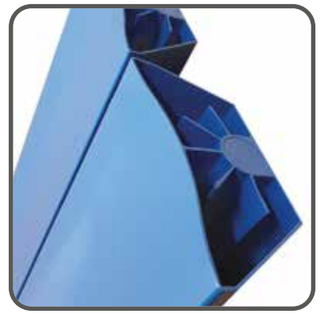

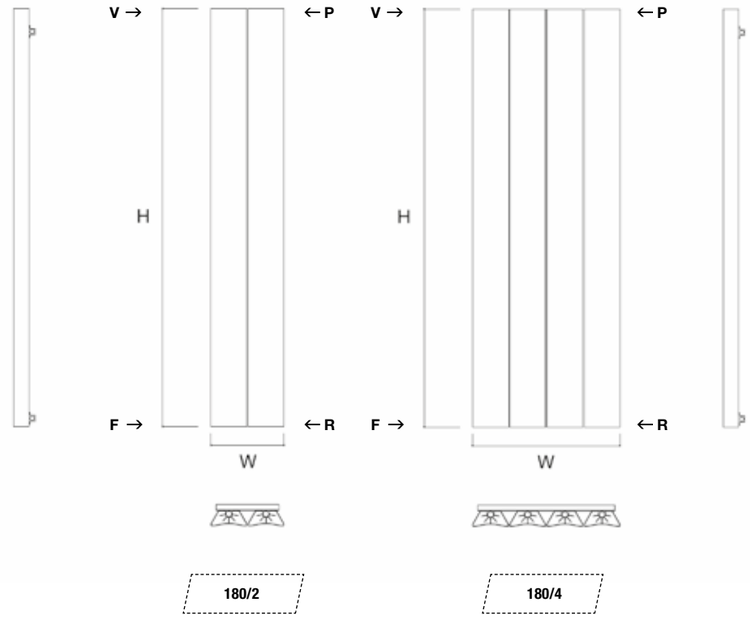

180/2 **180/4**

Model	Height (H) (mm)	Width (W) (mm)	Watts Δt 50°C	Btu's Δt 50°C	White Matt (inc VAT)	Anthracite 7016 Matt (inc VAT)	RAL Colour Finishes (inc VAT)	Weight (kgs)
Ruvo 180/2	1800	315	829	2829	**£471.60**	**£471.60**	£616.80	11
Ruvo 180/4	1800	635	1657	5654	**£944.40**	**£944.40**	£1,227.60	22

** All items in bold – Next working day delivery* ** All items not in bold – 5-7 working days delivery*

VALVES & ACCESSORIES
(Please see pages 141-148)

AVAILABLE IN THE FOLLOWING FINISHES:

White 9016 Matt | *Anthracite 7016 Matt* | *RAL Colour page 149* | *Finishes page 150*

MAIN IMAGE: Shown in Anthracite RAL 7016 Matt with additional Towel Bars and Essential Angled Valves in Chrome
INSET IMAGE: Shown in White RAL 9016 Matt

VELA

VERTICAL & HORIZONTAL

This elegant flat panel radiator manufactured from lightweight aluminium, has low water content along with many different options, including a striking polished towel bar and electric only versions. It provides energy efficient solutions to your heating requirements without compromising on style.

E: *sales@dqheating.com – **T:** 01842 810833*

LOW WATER CONTENT

MATERIAL • Aluminium

DELIVERY • Next working day

5 YEAR GUARANTEE

FOR FITTING INSTRUCTIONS VISIT www.dqheating.com

TECHNICAL INFORMATION
STANDARD CONNECTIONS 1/2"
F = Flow **P** = Plug
R = Return **V** = Vent

PIPE CENTRES
Vertical = radiator width + valves
Horizontal = radiator width + valves

Wall to front face = 90mm
Wall to pipe centre = 55mm

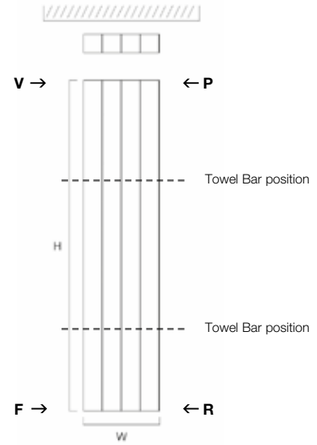

VERTICAL

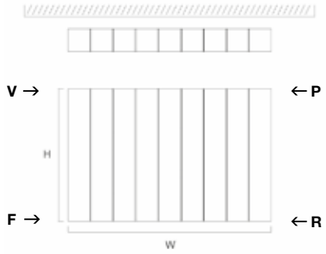

HORIZONTAL

Model	Height (H) (mm)	Width (W) (mm)	Watts Δt 50°C	Btu's Δt 50°C	White Matt (inc VAT)	Anthracite 7016 Matt (inc VAT)	Weight (kgs)
VERTICAL							
Vela 190/3	1900	367	843	2876	**£666.00**	**£666.00**	20
Vela 190/4	1900	488	1124	3835	**£849.60**	**£849.60**	26
HORIZONTAL							
Vela 60/3	600	367	318	1085	**£434.40**	**£434.40**	6
Vela 60/5	600	610	530	1808	**£661.20**	**£661.20**	10
Vela 60/7	600	853	742	2532	**£886.80**	**£886.80**	14
Vela 60/9	600	1096	954	3255	**£1,113.60**	**£1,113.60**	18

★ Next working day delivery

VALVES & ACCESSORIES
(Please see pages 141-148)

ADDITIONAL EXTRAS:
- *ADDITIONAL TOWEL BAR IN POLISHED. SIZES 367MM & 488MM* ***+ £139.20***

AVAILABLE IN THE FOLLOWING FINISHES:

White 9016 Matt
Anthracite 7016 Matt

MAIN IMAGE: Shown in Copper Lacquer with Essential Corner TRV in Chrome

DENALI

VERTICAL

The sophisticated design and finish of the Denali will ensure an iconic statement within your home. The perfect symmetry of the curved tubes and the lacquered finish make a masterful combination.

E: *sales@dqheating.com – **T:** 01842 810833*

MATERIAL
• Stainless steel Grade 304

DELIVERY
• All items 5-7 working days

25 YEAR GUARANTEE

FOR FITTING INSTRUCTIONS VISIT
www.dqheating.com

Black Nickel Lacquer

Copper Lacquer

TECHNICAL INFORMATION
STANDARD CONNECTIONS 1/2”
F = Flow **R** = Return **P** = Plug **V** = Vent

PIPE CENTRES
Vertical = radiator width + valves

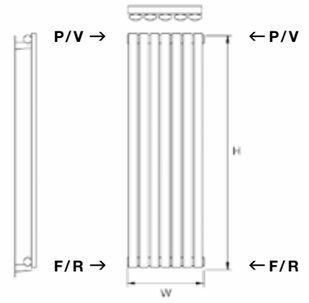

Wall to front face = 105mm
Wall to pipe centre = 65mm

VERTICAL

Model	Height (H) (mm)	Width (W) (mm)	Watts Δt 50°C	Btu’s Δt 50°C	Copper Lacquer (inc VAT)	Black Nickel Lacquer (inc VAT)	Weight (kgs)
Denali 180/5	1800	295	640	2184	**£621.60**	**£621.60**	15
Denali 180/7	1800	413	895	3054	**£829.20**	**£829.20**	20

★ *5-7 working days delivery*

VALVES & ACCESSORIES
(Please see pages 141-148)

ADDITIONAL EXTRAS:
- *TOWEL BAR TO FIT 295 & 413 WIDE IN CHROME* ***+ £63.60***
- *GRIP PEG IN WHITE OR CHROME* ***+ £25.20***
- *VIP HOOK IN WHITE OR CHROME* ***+ £36.00***

AVAILABLE IN THE FOLLOWING FINISHES:

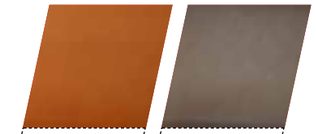

Copper Lacquer *Black Nickel Lacquer*

MAIN AND INSET IMAGE: Shown in Brushed with Essential Corner TRV in White / Chrome

DUNE

VERTICAL

Elegant simplicity and classic proportions, that's what makes this fine stainless steel radiator so irresistible.

E: *sales@dqheating.com* – ***T:*** *01842 810833*

TECHNICAL INFORMATION
STANDARD CONNECTIONS 1/2"
F = Flow **R** = Return **P** = Plug **V** = Vent

PIPE CENTRES
Vertical = radiator width + valves

Wall to front face = 90-100mm
Wall to pipe centre = 33-43mm

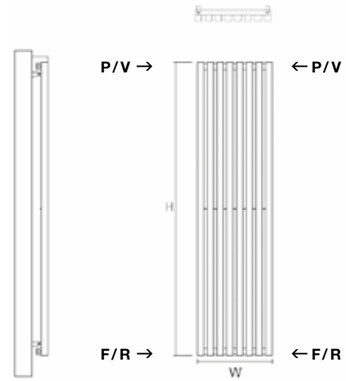

VERTICAL

Model	Height (H) (mm)	Width (W) (mm)	Watts Δt 50°C	Btu's Δt 50°C	Brushed Stainless (inc VAT)	Polished Stainless (inc VAT)	RAL Colour Finishes (inc VAT)	Weight (kgs)
Dune 160/5	1600	280	944	3223	**£925.20**	**£1,016.40**	£1,321.20	12
Dune 160/8	1600	460	1511	5156	**£1,401.60**	**£1,558.80**	£2,025.60	18
Dune 180/5	1800	280	1062	3625	**£1,027.20**	**£1,134.00**	£1,473.60	13
Dune 180/8	1800	460	1700	5800	**£1,579.20**	**£1,730.40**	£2,250.00	20
Dune 200/5	2000	280	1180	4027	**£1,137.60**	**£1,255.20**	£1,632.00	15
Dune 200/8	2000	460	1888	6445	**£1,738.80**	**£1,917.60**	£2,493.60	23

All items in bold – Next working day delivery *All items not in bold – 5-7 working days delivery*

VALVES & ACCESSORIES (Please see pages 141-148)

AVAILABLE IN THE FOLLOWING FINISHES:

Brushed Stainless *Polished Stainless* *RAL Colour page 149* *Finishes page 150*

MAIN AND INSET IMAGE:
Shown in Brushed with Essential Angled Valves in White / Chrome with additional towel rail in Brushed

DELTA

VERTICAL & HORIZONTAL

Slimline panels of either brushed or polished stainless steel, set together in four or seven elements, create this striking radiator. The Delta can be positioned horizontally if required.

E: *sales@dqheating.com* – ***T:*** *01842 810833*

MATERIAL
• Stainless steel Grade 304

DELIVERY
• All items in bold next working day

25 YEAR GUARANTEE

FOR FITTING INSTRUCTIONS VISIT
www.dqheating.com

TECHNICAL INFORMATION
STANDARD CONNECTIONS 1/2”
F = Flow **R** = Return **P** = Plug **V** = Vent

PIPE CENTRES
Vertical = radiator width + valves
Horizontal = radiator width - 50mm

Wall to front face = 60-70mm
Wall to pipe centre = 35-45mm

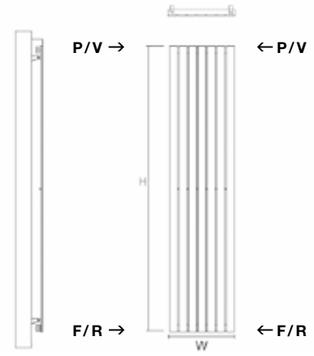

VERTICAL

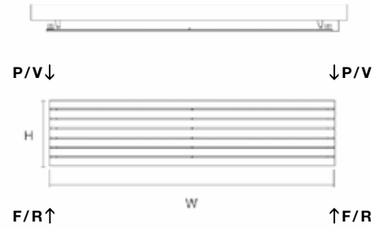

HORIZONTAL

Model	Height (H) (mm)	Width (W) (mm)	Watts Δt 50°C	Btu's Δt 50°C	Brushed Stainless (inc VAT)	Polished Stainless (inc VAT)	RAL Colour Finishes (inc VAT)	Weight (kgs)
VERTICAL								
Delta 160/4 V	1600	230	631	2155	**£656.40**	**£722.40**	£939.60	12
Delta 160/7 V	1600	410	929	3173	**£957.60**	**£1,053.60**	£1,369.20	18
Delta 180/4 V	1800	230	697	2380	**£732.00**	**£805.20**	£1,046.40	13
Delta 180/7 V	1800	410	1046	3570	**£1,060.80**	**£1,167.60**	£1,519.20	20
Delta 200/4 V	2000	230	774	2644	**£806.40**	**£885.60**	£1,150.80	15
Delta 200/7 V	2000	410	1162	3966	**£1,182.00**	**£1,299.60**	£1,688.40	22
HORIZONTAL								
Delta 160/4 H	230	1600	631	2155	**£656.40**	**£722.40**	£939.60	12
Delta 160/7 H	410	1600	929	3173	**£957.60**	**£1,053.60**	£1,369.20	18
Delta 180/4 H	230	1800	697	2380	**£732.00**	**£805.20**	£1,046.40	13
Delta 180/7 H	410	1800	1046	3570	**£1,060.80**	**£1,167.60**	£1,519.20	20
Delta 200/4 H	230	2000	774	2644	**£806.40**	**£885.60**	£1,150.80	15
Delta 200/7 H	410	2000	1162	3966	**£1,182.00**	**£1,299.60**	£1,688.40	22

★ *All items in bold – Next working day delivery* ★ *All items not in bold – 5-7 working days delivery*

VALVES & ACCESSORIES
(Please see pages 141-148)

ADDITIONAL EXTRAS:
- *TOWEL BAR TO FIT 230MM WIDE IN BRUSHED* + ***£58.80***
- *TOWEL BAR TO FIT 230MM WIDE IN POLISHED* + ***£72.00***
- *TOWEL BAR TO FIT 410MM WIDE IN BRUSHED* + ***£79.20***
- *TOWEL BAR TO FIT 410MM WIDE IN POLISHED* + ***£100.80***

AVAILABLE IN THE FOLLOWING FINISHES:

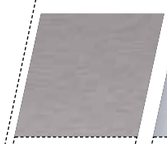
Brushed Stainless

Polished Stainless

RAL Colour page 149

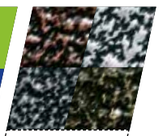
Finishes page 150

MAIN IMAGE:
Shown in Polished with Jupiter Angled Valves in Brushed Nickel
INSET IMAGE:
Shown in Brushed

COVE

STAINLESS VERTICAL

The stainless steel Cove radiator offers the same excellent design and value for money as the mild steel original but in a superior material. The sleek oval tubes look fantastic in these brushed (with polished ends) and polished stainless finishes.

E: sales@dqheating.com – **T:** 01842 810833

MATERIAL
• Stainless steel Grade 304

DELIVERY
• All items in bold next working day

25 YEAR GUARANTEE

FOR FITTING INSTRUCTIONS VISIT
www.dqheating.com

TECHNICAL INFORMATION
STANDARD CONNECTIONS 1/2”
F = Flow **R** = Return **P** = Plug **V** = Vent

PIPE CENTRES
Vertical = radiator width + valves
Horizontal = radiator width - 45mm

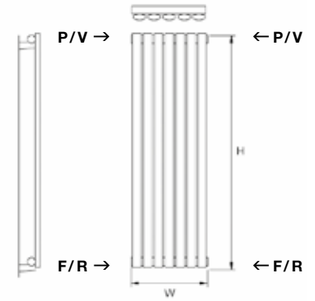

SINGLE VERTICAL

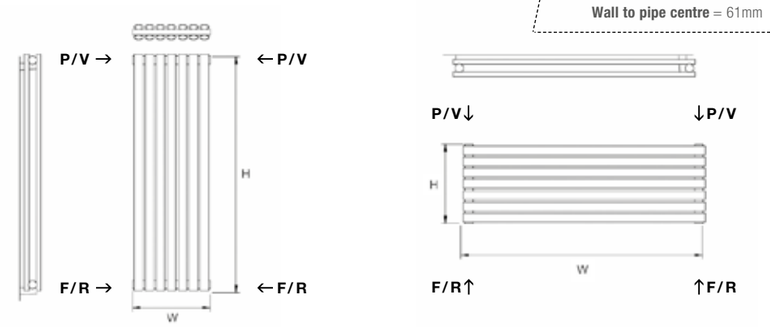

DOUBLE VERTICAL

SINGLE VERTICAL
Wall to front face = 105mm
Wall to pipe centre = 65mm

DOUBLE VERTICAL
Wall to front face = 105mm
Wall to pipe centre = 65mm

SINGLE HORIZONTAL
Wall to front face = 61mm
Wall to pipe centre = 20mm

DOUBLE HORIZONTAL
Wall to front face = 105mm
Wall to pipe centre = 61mm

Additional horizontal brackets ***+ £27.60 (inc VAT)***

Model	Height (H) (mm)	Width (W) (mm)	Watts Δt 50°C	Btu's Δt 50°C	Brushed Stainless (inc VAT)	Polished Stainless (inc VAT)	RAL Colour / Finishes (inc VAT)	Weight (kgs)
SINGLE								
Cove S180/5	1800	295	640	2184	**£478.80**	**£478.80**	£621.60	15
Cove S180/7	1800	413	895	3054	**£638.40**	**£638.40**	£829.20	20
DOUBLE								
Cove S180/5D	1800	295	970	3310	**£796.80**	**£796.80**	£1,034.40	28
Cove S180/7D	1800	413	1365	4657	**£1,074.00**	**£1,074.00**	£1,395.60	36

★ *All items in bold – Next working day delivery* ★ *All items not in bold – 5-7 working days delivery*

VALVES & ACCESSORIES
(Please see pages 141-148)

ADDITIONAL EXTRAS:
- *HORIZONTAL BRACKETS* ***+ £27.60***
- *TOWEL BAR TO FIT 295 & 413 SECTION IN CHROME* ***+ £63.60***
- *GRIP PEG IN WHITE OR CHROME* ***+ £25.20***
- *VIP HOOK IN WHITE OR CHROME* ***+ £36.00***

AVAILABLE IN THE FOLLOWING FINISHES:

MAIN IMAGE:
Shown in Brushed with Jupiter Angled Valves in Brushed Nickel
INSET IMAGE:
Shown in Polished

COVE

STAINLESS HORIZONTAL

With a variety of single and double horizontal versions, available in the same finishes as the vertical, the horizontal radiator adds to an already plentiful range of Cove stainless steel radiators.

E: sales@dqheating.com – **T:** 01842 810833

MATERIAL
• Stainless steel Grade 304

DELIVERY
• All items in bold next working day

25 YEAR GUARANTEE

FOR FITTING INSTRUCTIONS VISIT
www.dqheating.com

TECHNICAL INFORMATION
STANDARD CONNECTIONS 1/2”
F = Flow **R** = Return **P** = Plug **V** = Vent

PIPE CENTRES
Horizontal = radiator width + valves

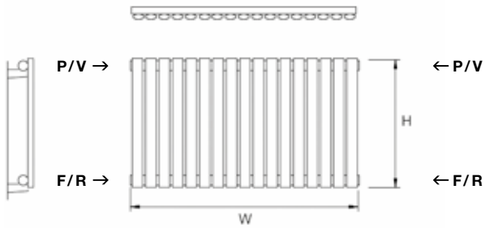

SINGLE HORIZONTAL

SINGLE
Wall to front face = 105mm
Wall to pipe centre = 65mm

DOUBLE
Wall to front face = 105mm
Wall to pipe centre = 65mm

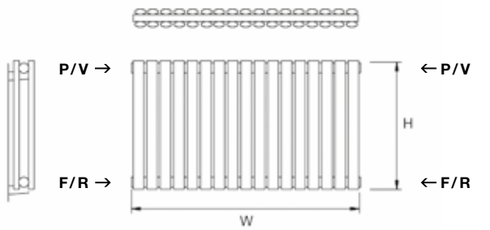

DOUBLE HORIZONTAL

Model	Height (H) (mm)	Width (W) (mm)	Watts Δt 50°C	Btu's Δt 50°C	Brushed Stainless (inc VAT)	Polished Stainless (inc VAT)	RAL Colour / Finishes (inc VAT)	Weight (kgs)
SINGLE								
Cove S600/7	600	413	300	1024	**£271.20**	**£271.20**	£351.60	10
Cove S600/10	600	590	425	1450	**£315.60**	**£315.60**	£410.40	12
Cove S600/14	600	826	595	2030	**£418.80**	**£418.80**	£543.60	14
Cove S600/17	600	1003	725	2474	**£494.40**	**£494.40**	£642.00	16
Cove S600/20	600	1180	850	2900	**£570.00**	**£570.00**	£740.40	18
DOUBLE								
Cove S600/7D	600	413	475	1621	**£421.20**	**£421.20**	£546.00	17
Cove S600/10D	600	590	680	2320	**£558.00**	**£558.00**	£723.60	19
Cove S600/14D	600	826	960	3276	**£742.80**	**£742.80**	£964.80	21
Cove S600/17D	600	1003	1160	3958	**£856.80**	**£856.80**	£1,114.80	24
Cove S600/20D	600	1180	1365	4657	**£1,002.00**	**£1,002.00**	£1,302.00	27

★ All items in bold – Next working day delivery ★All items not in bold – 5-7 working days delivery

VALVES & ACCESSORIES
(Please see pages 141-148)

ADDITIONAL EXTRAS:
- *TOWEL BAR TO FIT 413 SECTION IN CHROME* ***+ £63.60***
- *GRIP PEG IN WHITE OR CHROME* ***+ £25.20***
- *VIP HOOK IN WHITE OR CHROME* ***+ £36.00***

AVAILABLE IN THE FOLLOWING FINISHES:

Brushed Stainless | *Polished Stainless* | *RAL Colour page 149* | *Finishes page 150*

MAIN IMAGE: Shown in Graphite Black RAL 9011 with Enzo TRV in Antique Brass
INSET IMAGE: Shown in Pure White RAL 9010

2 COLUMN

CAST IRON

The cast iron 2 column radiator from DQ is cast in Europe and assembled in the UK. It is available in 4 traditional heights, many wonderful paint finishes and a unique lacquered satin polish finish. All our cast iron radiators undergo an extreme testing process that is unrivalled in the cast iron radiator market. Cast iron radiators have been used in stately homes and some of the finest dwellings since the early 20th century.

E: *sales@dqheating.com* – ***T:*** *01842 810833*

MATERIAL
• Cast Iron

DELIVERY
• Colour 3-4 weeks
• Polished 4-6 weeks

10 YEAR GUARANTEE ON CASTING

FOR FITTING INSTRUCTIONS VISIT
www.dqheating.com

TECHNICAL INFORMATION
STANDARD CONNECTIONS 1/2”
F = Flow **R** = Return **P** = Plug **V** = Vent

PIPE CENTRES = radiator width + valves

Standard wall stay

Luxury wall stay

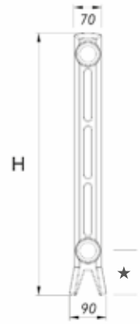

★ 100mm on 490 H
95mm on all others

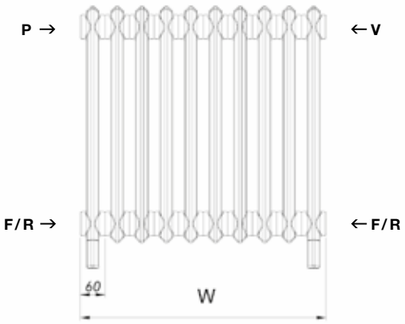

Width = 60mm x no. of sections + 30mm

To price this radiator you will need to calculate how many sections you require. All prices shown are per section.

Model	Height (H) (mm)	Width (W) (mm)	Watts Δt 50°C	Btu's Δt 50°C	Standard Colour (Per Section) (inc VAT)	Little Greene / Sanderson / F&B & RAL Colour (Per Section) (inc VAT)	Lacquered Satin Polished (Per Section) (inc VAT)	Premium Lacquered Finishes (Per Section) (inc VAT)	Weight (kgs)
CR2/490	490	60	43	147	£57.54	£61.18	£135.60	£153.10	3
CR2/640	640	60	54	184	£75.92	£79.56	£153.97	£171.47	3
CR2/760	760	60	64	218	£91.27	£94.91	£169.32	£186.83	4
CR2/1040	1040	60	88	300	£100.67	£104.32	£178.73	£196.23	6

★ ***Please note:*** *Cast iron radiators are very heavy; due to the weight we can only supply radiators fully assembled up to 1200mm in length. Radiators over 1200mm in length will need to be joined on site, we will supply appropriate nipples and gaskets to do this. There will be a deposit of* ***£60.00*** *required for the joining tool, which is refundable on return. All cast iron radiators will need to be delivered on a pallet and there is an additional* ***£36.00*** *charge per order.*

AVAILABLE IN THE FOLLOWING FINISHES:

VALVES & ACCESSORIES
(Please see pages 141-148)

ADDITIONAL EXTRAS:
• *STANDARD WALL STAY* **+ £15.60**
• *LUXURY WALL STAY (MANY FINISHES AVAILABLE)* **+ £42.00**

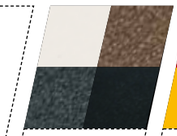

Cast Iron Standard Colours page 151

Little Greene Sanderson F&B & RAL page 149-151

Lacquered Satin Polished page 151

Premium Lacquered Finishes page 151

MAIN IMAGE:
Shown in Lacquered Polished with Enzo TRV in Pewter
INSET IMAGE:
Shown in Pure White RAL 9010

4 COLUMN

CAST IRON

The cast iron 4 column radiator from DQ is a timeless design from the 1930's which is available in 5 traditional heights. With clean, crisp casting lines, an elegant, rounded, smooth shoulder and, bold splayed feet – this is, we believe, the definitive 4 column cast iron radiator design. Our cast iron radiators are cast in Europe and finished in one of our many beautiful painted or polished finishes.

E: *sales@dqheating.com – **T:** 01842 810833*

MATERIAL
• Cast Iron

DELIVERY
• Colour 3-4 weeks
• Polished 4-6 weeks

10 YEAR GUARANTEE ON CASTING

FOR FITTING INSTRUCTIONS VISIT
www.dqheating.com

TECHNICAL INFORMATION
STANDARD CONNECTIONS 1/2"
F = Flow **R** = Return **P** = Plug **V** = Vent

PIPE CENTRES = radiator width + valves

Standard wall stay

Luxury wall stay

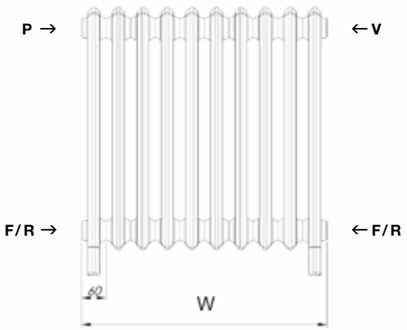

Width = 60mm x no. of sections + 30mm

To price this radiator you will need to calculate how many sections you require. All prices shown are per section.

Model	Height (H) (mm)	Width (W) (mm)	Watts Δt 50°C	Btu's Δt 50°C	Standard Colour (Per Section) (inc VAT)	Little Greene / Sanderson / F&B & RAL Colour (Per Section) (inc VAT)	Lacquered Satin Polished (Per Section) (inc VAT)	Premium Lacquered Finishes (Per Section) (inc VAT)	Weight (kgs)
CR4/360	355	60	47	160	£55.36	£60.09	£134.51	£152.01	4
CR4/480	475	60	62	212	£57.93	£62.72	£137.12	£154.62	4
CR4/660	655	60	87	297	£64.87	£69.78	£144.20	£161.69	6
CR4/760	762	60	101	345	£74.89	£79.99	£154.40	£171.91	7
CR4/960	955	60	125	427	£82.65	£87.92	£162.33	£179.82	8

★ ***Please note:*** *Cast iron radiators are very heavy; due to the weight we can only supply radiators fully assembled up to 1200mm in length. Radiators over 1200mm in length will need to be joined on site, we will supply appropriate nipples and gaskets to do this. There will be a deposit of **£60.00** required for the joining tool, which is refundable on return. All cast iron radiators will need to be delivered on a pallet and there is an additional **£36.00** charge per order.*

AVAILABLE IN THE FOLLOWING FINISHES:

VALVES & ACCESSORIES
(Please see pages 141-148)

ADDITIONAL EXTRAS:
- *STANDARD WALL STAY* + ***£15.60***
- *LUXURY WALL STAY (MANY FINISHES AVAILABLE)* + ***£42.00***

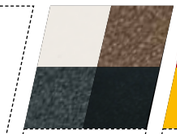

Cast Iron Standard Colours page 151

Little Greene Sanderson F&B & RAL page 149-151

Lacquered Satin Polished page 151

Premium Lacquered Finishes page 151

MAIN IMAGE:
Shown in Copper Lacquer with Enzo Angled TRV in Polished Brass
INSET IMAGE:
Shown in Lacquered Polished

6 COLUMN

CAST IRON

The DQ 6 column cast iron radiators are a timeless design from the 1930's with clean and crisp casting lines, an elegant, rounded, smooth shoulder and, bold splayed feet. This is, we believe, the definitive 6 column cast iron radiator; cast in Europe and available in one of our many beautiful painted or polished finishes and 4 traditional heights.

E: *sales@dqheating.com* – ***T:*** *01842 810833*

MATERIAL
• Cast Iron

DELIVERY
• Colour 3-4 weeks
• Polished 4-6 weeks

10 YEAR GUARANTEE ON CASTING

FOR FITTING INSTRUCTIONS VISIT
www.dqheating.com

TECHNICAL INFORMATION
STANDARD CONNECTIONS 1/2"
F = Flow **R** = Return **P** = Plug **V** = Vent

PIPE CENTRES = radiator width + valves

Standard wall stay

Luxury wall stay

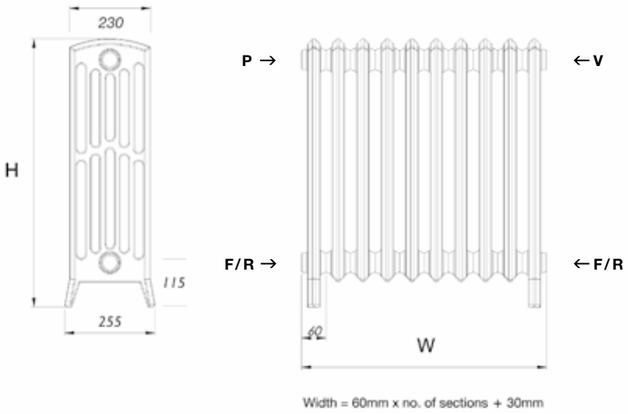

Width = 60mm x no. of sections + 30mm

To price this radiator you will need to calculate how many sections you require. All prices shown are per section.

Model	Height (H) (mm)	Width (W) (mm)	Watts Δt 50°C	Btu's Δt 50°C	Standard Colour (Per Section) (inc VAT)	Little Greene / Sanderson F&B & RAL Colour (Per Section) (inc VAT)	Lacquered Satin Polished (Per Section) (inc VAT)	Premium Lacquered Finishes (Per Section) (inc VAT)	Weight (kgs)
CR6/485	485	60	94	321	£72.74	£77.81	£152.22	£169.71	7
CR6/660	655	60	127	433	£81.93	£87.18	£161.60	£179.10	8
CR6/760	762	60	148	505	£94.80	£100.32	£174.72	£192.22	10
CR6/960	960	60	184	628	£108.18	£113.95	£188.35	£205.85	13

★ ***Please note:*** *Cast iron radiators are very heavy; due to the weight we can only supply radiators fully assembled up to 1200mm in length. Radiators over 1200mm in length will need to be joined on site, we will supply appropriate nipples and gaskets to do this. There will be a deposit of* ***£60.00*** *required for the joining tool, which is refundable on return. All cast iron radiators will need to be delivered on a pallet and there is an additional* ***£36.00*** *charge per order.*

AVAILABLE IN THE FOLLOWING FINISHES:

VALVES & ACCESSORIES
(Please see pages 141-148)

ADDITIONAL EXTRAS:
- *STANDARD WALL STAY* **+ £15.60**
- *LUXURY WALL STAY (MANY FINISHES AVAILABLE)* **+ £42.00**

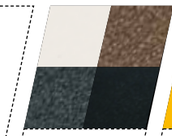

Cast Iron Standard Colours page 151

Little Greene Sanderson F&B & RAL page 149-151

Lacquered Satin Polished page 151

Premium Lacquered Finishes page 151

MAIN IMAGE:
Shown in Rose Gold Premium Finish with Enzo Angled TRV in Antique Copper
INSET IMAGE:
Shown in Lacquered Polished

BRONTE

CAST IRON

The beautiful Bronte features two columns of elegant scalloped decoration from the late Victorian period, delicately cast with exquisite details. The stylish bohemian foliage extends from the middle of each section to the bottom of the feet and across the shoulders. A timeless design classic, made using original moulds and traditional techniques. DQ's Bronte cast iron radiators are available in four heights. The traditional casting is perhaps the most popular in this range because of its elegant proportions and suitability for most settings.

E: *sales@dqheating.com – **T:** 01842 810833*

MATERIAL
• Cast Iron

DELIVERY
• Colour 3-4 weeks
• Polished 4-6 weeks

10 YEAR GUARANTEE ON CASTING

FOR FITTING INSTRUCTIONS VISIT
www.dqheating.com

TECHNICAL INFORMATION
STANDARD CONNECTIONS 1/2"
F = Flow **R** = Return **P** = Plug **V** = Vent

PIPE CENTRES = radiator width + valves

Standard wall stay

Luxury wall stay

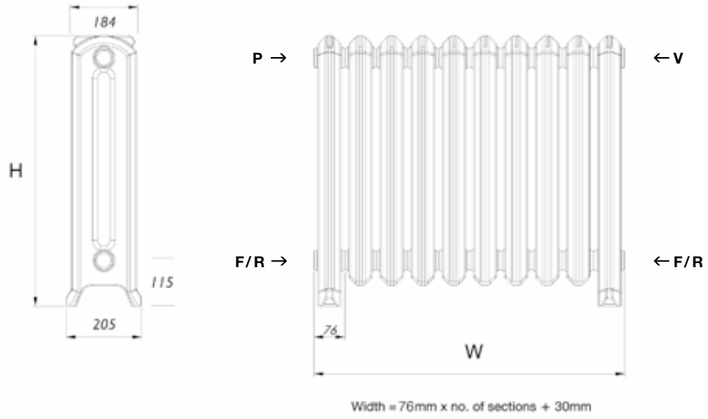

To price this radiator you will need to calculate how many sections you require. All prices shown are per section.

Model	Height (H) (mm)	Width (W) (mm)	Watts Δt 50°C	Btu's Δt 50°C	Standard Colour (Per Section) (inc VAT)	Little Greene / Sanderson / F&B & RAL Colour (Per Section) (inc VAT)	Lacquered Highlight Polished (Per Section) (inc VAT)	Lacquered Satin Polished (Per Section) (inc VAT)	Premium Lacquered Finishes (Per Section) (inc VAT)	Weight (kgs)
CR/BRO/510	510	76	74	252	£94.69	£98.33	£127.10	£172.61	£190.10	8
CR/BRO/660	660	76	105	358	£106.25	£109.89	£138.66	£184.16	£201.66	12
CR/BRO/760	760	76	120	409	£118.31	£121.97	£150.73	£196.23	£213.74	13
CR/BRO/960	960	76	148	505	£134.65	£138.31	£167.07	£212.57	£230.08	15

★ ***Please note:*** *Cast iron radiators are very heavy; due to the weight we can only supply radiators fully assembled up to 1200mm in length. Radiators over 1200mm in length will need to be joined on site, we will supply appropriate nipples and gaskets to do this. There will be a deposit of **£60.00** required for the joining tool, which is refundable on return. All cast iron radiators will need to be delivered on a pallet and there is an additional **£36.00** charge per order.*

AVAILABLE IN THE FOLLOWING FINISHES:

VALVES & ACCESSORIES
(Please see pages 141-148)

ADDITIONAL EXTRAS:
- *STANDARD WALL STAY* **+ £15.60**
- *LUXURY WALL STAY (MANY FINISHES AVAILABLE)* **+ £42.00**

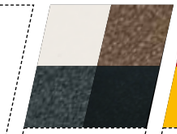

Cast Iron Standard Colours page 151

Little Greene Sanderson F&B & RAL page 149-151

Lacquered Highlight & Satin Polished page 151

Premium Lacquered Finishes page 151

MAIN IMAGE:
Shown in Gold Lacquer with Enzo Angled TRV in Antique Brass
INSET IMAGE:
Shown in Lacquered Polished

LOXLEY

CAST IRON

These beautiful cast iron radiators feature elegant scalloped decoration from the Edwardian period, delicately cast with exquisite details. The styled bohemian foliage extends from the middle of each section to the bottom of the feet and across the shoulder. A timeless design classically used in stately homes and mansions across Europe since the early 20th century. DQ's Loxley range is available in two heights.

E: *sales@dqheating.com – **T:** 01842 810833*

MATERIAL
• Cast Iron

DELIVERY
• Colour 3-4 weeks
• Polished 4-6 weeks

10 YEAR GUARANTEE ON CASTING

FOR FITTING INSTRUCTIONS VISIT
www.dqheating.com

TECHNICAL INFORMATION
STANDARD CONNECTIONS 1/2"
F = Flow **R** = Return **P** = Plug **V** = Vent

PIPE CENTRES = radiator width + valves

Standard wall stay

Luxury wall stay

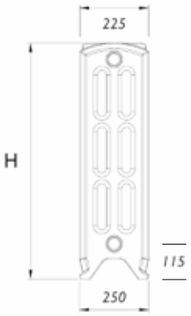

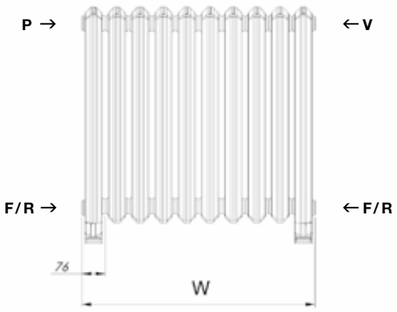

Width = 76mm x no. of sections + 30mm

To price this radiator you will need to calculate how many sections you require. All prices shown are per section.

Model	Height (H) (mm)	Width (W) (mm)	Watts Δt 50°C	Btu's Δt 50°C	Standard Colour (Per Section) (inc VAT)	Little Greene / Sanderson F&B & RAL Colour (Per Section) (inc VAT)	Lacquered Highlight Polished (Per Section) (inc VAT)	Lacquered Satin Polished (Per Section) (inc VAT)	Premium Lacquered Finishes (Per Section) (inc VAT)	Weight (kgs)
CR/LOX/770	768	76	144	491	£127.14	£130.79	£159.55	£205.05	£222.56	12
CR/LOX/970	970	76	179	611	£154.53	£158.17	£186.94	£232.45	£249.94	15

★ ***Please note:*** *Cast iron radiators are very heavy; due to the weight we can only supply radiators fully assembled up to 1200mm in length. Radiators over 1200mm in length will need to be joined on site, we will supply appropriate nipples and gaskets to do this. There will be a deposit of **£60.00** required for the joining tool, which is refundable on return. All cast iron radiators will need to be delivered on a pallet and there is an additional **£36.00** charge per order.*

AVAILABLE IN THE FOLLOWING FINISHES:

VALVES & ACCESSORIES
(Please see pages 141-148)

ADDITIONAL EXTRAS:
- *STANDARD WALL STAY* **+ £15.60**
- *LUXURY WALL STAY (MANY FINISHES AVAILABLE)* **+ £42.00**

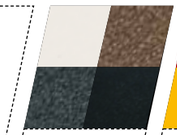

Cast Iron Standard Colours page 151

Little Greene Sanderson F&B & RAL page 149-151

Lacquered Highlight & Satin Polished page 151

Premium Lacquered Finishes page 151

MAIN IMAGE:
Shown in Anthracite 7016 Texture with Enzo Angled TRV Valves in Antique Brass
INSET IMAGES:
Shown in Anthracite 7016 Texture & White RAL 9016

MODUS

STOCKED VERTICAL

The Modus Stocked range brings the same quality and value as the Modus Made to Measure range, but with a reduced lead time. You still have many sizes available to choose from and the same amount of finishing choices, all available either next working day (white 9016) or 5-7 working days (anthracite/colour/finish).

***E:** sales@dqheating.com – **T:** 01842 810833*

MATERIAL
• Mild steel

DELIVERY
• All items in bold next working day

5 YEAR GUARANTEE

FOR FITTING INSTRUCTIONS VISIT
www.dqheating.com

TECHNICAL INFORMATION
STANDARD CONNECTIONS 1/2”

F = Flow **P** = Plug
R = Return **V** = Vent

PIPE CENTRES = radiator width + valves

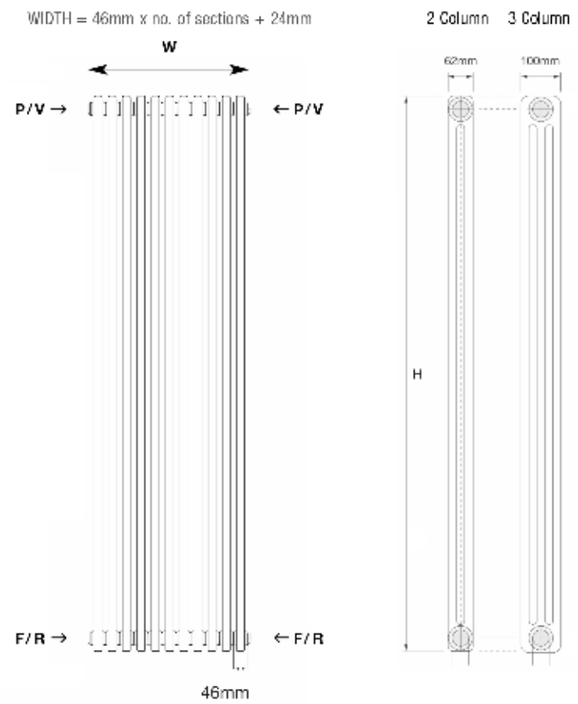

Model	Height (H) (mm)	Width (W) (mm)	Watts Δt 50°C	Btu's Δt 50°C	White (inc VAT)	Anthracite 7016 Texture (inc VAT)	RAL Colour / Finishes (inc VAT)	Weight (kgs)
2 COLUMN								
Modus-ST2.1800/6	1800	300	750	2559	**£212.40**	£255.60	£274.80	18
Modus-ST2.1800/8	1800	392	1000	3412	**£277.20**	£333.60	£360.00	24
Modus-ST2.1800/11	1800	530	1375	4697	**£382.80**	£458.40	£495.60	33
3 COLUMN								
Modus-ST3.1800/6	1800	300	1020	3480	**£262.80**	£315.60	£342.00	24
Modus-ST3.1800/8	1800	392	1360	4640	**£344.40**	£414.00	£447.60	32
Modus-ST3.1800/11	1800	530	1870	6380	**£474.00**	£570.00	£616.80	44

★All items in bold – next working day delivery ★ All items not in bold – 5-7 working days delivery

VALVES & ACCESSORIES (Please see pages 141-148)

AVAILABLE IN THE FOLLOWING FINISHES:

NEW

MAIN IMAGE:
Shown in White RAL 9016 with Enzo Angled Valves in Antique Brass
INSET IMAGES:
Shown in White RAL 9016 & Anthracite 7016 Texture

MODUS

STOCKED HORIZONTAL

The Modus Stocked range brings the same quality and value as the Modus Made to Measure range, but with a reduced lead time. You still have many sizes available to choose from and the same amount of finishing choices, all available either next working day (white 9016) or 5-7 working days (anthracite/colour/finish).

E: *sales@dqheating.com* – ***T:*** *01842 810833*

MATERIAL
• Mild steel

DELIVERY
• All items in bold next working day

5 YEAR GUARANTEE

FOR FITTING INSTRUCTIONS VISIT
www.dqheating.com

TECHNICAL INFORMATION
STANDARD CONNECTIONS 1/2"

F = Flow **P** = Plug
R = Return **V** = Vent

PIPE CENTRES = radiator width + valves

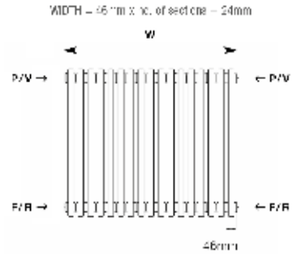

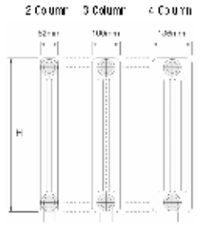

Model	Height (H) (mm)	Width (W) (mm)	Watts Δt 50°C	Btu's Δt 50°C	White (inc VAT)	Anthracite 7016 Texture (inc VAT)	RAL Colour Finishes (inc VAT)	Weight (kgs)
2 COLUMN								
Modus-ST2.500/13	500	622	481	1641	**£235.20**	£282.00	£304.80	13
Modus-ST2.500/17	500	806	629	2146	**£301.20**	£362.40	£392.40	17
Modus-ST2.500/21	500	990	777	2651	**£375.60**	£450.00	£488.40	21
Modus-ST2.500/26	500	1220	962	3282	**£460.80**	£552.00	£597.60	26
Modus-ST2.500/30	500	1404	1110	3787	**£526.80**	£633.60	£685.20	30
Modus-ST2.600/13	600	622	572	1952	**£241.20**	£289.20	£313.20	13
Modus-ST2.600/17	600	806	748	2552	**£310.80**	£372.00	£402.00	17
Modus-ST2.600/21	600	990	924	3153	**£386.40**	£463.20	£501.60	21
Modus-ST2.600/26	600	1220	1144	3903	**£472.80**	£567.60	£614.40	26
Modus-ST2.600/30	600	1404	1320	4504	**£538.80**	£645.60	£699.60	30
3 COLUMN								
Modus-ST3.500/13	500	622	663	2262	**£265.20**	£316.80	£343.20	13
Modus-ST3.500/17	500	806	867	2958	**£340.80**	£409.20	£442.80	17
Modus-ST3.500/21	500	990	1071	3654	**£423.60**	£508.80	£550.80	21
Modus-ST3.500/26	500	1220	1326	4524	**£519.60**	£624.00	£675.60	26
Modus-ST3.500/30	500	1404	1530	5220	**£596.40**	£715.20	£775.20	30
Modus-ST3.500/35	500	1634	1785	6090	**£692.40**	£830.40	£898.80	35
Modus-ST3.500/40	500	1864	2040	6960	**£788.40**	£945.60	£1,023.60	40
Modus-ST3.600/13	600	622	780	2661	**£277.20**	£333.60	£361.20	13
Modus-ST3.600/17	600	806	1020	3480	**£358.80**	£428.40	£465.60	17
Modus-ST3.600/21	600	990	1260	4299	**£445.20**	£534.00	£577.20	21
Modus-ST3.600/26	600	1220	1560	5323	**£546.00**	£654.00	£709.20	26
Modus-ST3.600/30	600	1404	1800	6142	**£626.40**	£751.20	£813.60	30
Modus-ST3.600/35	600	1634	2100	7165	**£726.00**	£872.40	£944.40	35
Modus-ST3.600/40	600	1864	2400	8189	**£826.80**	£992.40	£1,075.20	40
Modus-ST3.750/13	750	622	975	3327	**£302.40**	£363.60	£393.60	13
Modus-ST3.750/17	750	806	1275	4350	**£391.20**	£469.20	£508.80	17
Modus-ST3.750/21	750	990	1575	5374	**£487.20**	£584.40	£632.40	21
4 COLUMN								
Modus-ST4.500/13	500	622	845	2883	**£309.60**	£370.80	£402.00	13
Modus-ST4.500/17	500	806	1105	3770	**£399.60**	£478.80	£519.60	17
Modus-ST4.500/21	500	990	1365	4657	**£496.80**	£596.40	£645.60	21
Modus-ST4.500/26	500	1220	1690	5766	**£610.80**	£730.80	£793.20	26
Modus-ST4.500/30	500	1404	1950	6653	**£699.60**	£840.00	£910.80	30
Modus-ST4.500/35	500	1634	2275	7762	**£813.60**	£975.60	£1,057.20	35
Modus-ST4.500/40	500	1864	2600	8871	**£926.40**	£1,112.40	£1,203.60	40
Modus-ST4.600/13	600	622	1001	3415	**£330.00**	£394.80	£427.20	26
Modus-ST4.600/17	600	806	1309	4466	**£424.80**	£510.00	£552.00	34
Modus-ST4.600/21	600	990	1617	5517	**£528.00**	£633.60	£686.40	42
Modus-ST4.600/26	600	1220	2002	6831	**£648.00**	£777.60	£842.40	51
Modus-ST4.600/30	600	1404	2310	7882	**£745.20**	£894.00	£968.40	60
Modus-ST4.750/13	750	622	1235	4214	**£363.60**	£435.60	£471.60	13
Modus-ST4.750/17	750	806	1615	5510	**£470.40**	£564.00	£610.80	17
Modus-ST4.750/21	750	990	1995	6807	**£584.40**	£699.60	£758.40	21

For finishing options see page 57

All items in bold – next working day delivery

All items not in bold – 5-7 working days delivery

MAIN IMAGE: Shown in Bare Metal Lacquer with Enzo Angled TRV Valves in Brushed Nickel
INSET IMAGES: Shown in Bare Metal Lacquer

MODUS

STOCKED LACQUERED VERTICAL

The Modus Lacquered range is a brand new edition to the Modus family. The bare metal, copper, black nickel and brass lacquers really bring this model to life, enhancing its machined metal finish and giving it an exclusive industrial feel.

E: *sales@dqheating.com* – ***T:*** *01842 810833*

MATERIAL
• Mild steel

DELIVERY
• All items in bold next working day

5 YEAR GUARANTEE

FOR FITTING INSTRUCTIONS VISIT
www.dqheating.com

NEW

TECHNICAL INFORMATION
STANDARD CONNECTIONS 1/2”

F = Flow **P** = Plug
R = Return **V** = Vent

PIPE CENTRES = radiator width + valves

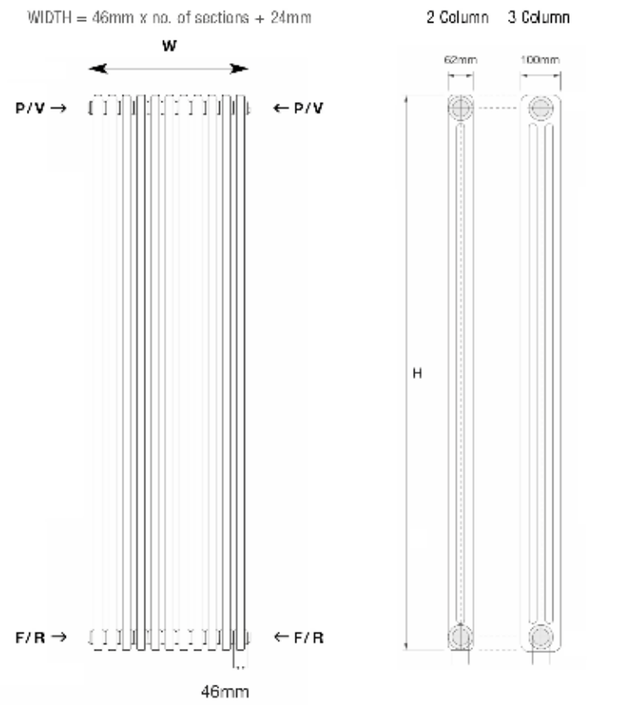

Model	Height (H) (mm)	Width (W) (mm)	Watts Δt 50°C	Btu’s Δt 50°C	Bare Metal (inc VAT)	Copper, Black Nickel, Brass (inc VAT)	Weight (kgs)
2 COLUMN							
Modus-L2.1800/6	1800	300	750	2559	**£274.80**	£357.60	18
Modus-L2.1800/8	1800	392	1000	3412	**£360.00**	£468.00	24
Modus-L2.1800/11	1800	530	1375	4697	**£495.60**	£644.40	33
3 COLUMN							
Modus-L3.1800/6	1800	300	1020	3480	**£342.00**	£445.20	24
Modus-L3.1800/8	1800	392	1360	4640	**£447.60**	£582.00	32
Modus-L3.1800/11	1800	530	1870	6380	**£616.80**	£802.80	44

★ *All items in bold – next working day delivery* ★ *All items not in bold – 5-7 working days delivery*

VALVES & ACCESSORIES (Please see pages 141-148)

Please be aware that the Modus Lacquered range has been created to enhance the marking of the manufacturing process, this creates personal markings to each section.

AVAILABLE IN THE FOLLOWING FINISHES:

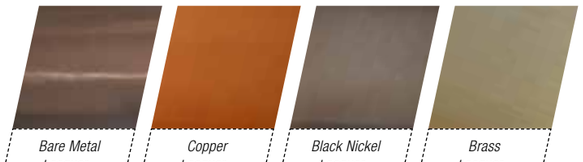

MAIN IMAGE: Shown in Copper Lacquer with Enzo Angled Valves in Black Nickel
INSET IMAGES: Shown in Copper Lacquer, Black Nickel Lacquer and Brass Lacquer

NEW

MODUS

STOCKED LACQUERED HORIZONTAL

The Modus Lacquered range is a brand new edition to the Modus family. The bare metal, copper, black nickel and brass lacquers really bring this model to life, enhancing its machined metal finish and giving it an exclusive industrial feel.

E: *sales@dqheating.com* – ***T:*** *01842 810833*

MATERIAL
• Mild steel

DELIVERY
• All items in bold next working day

5 YEAR GUARANTEE

FOR FITTING INSTRUCTIONS VISIT
www.dqheating.com

TECHNICAL INFORMATION
STANDARD CONNECTIONS 1/2"

F = Flow **P** = Plug
R = Return **V** = Vent

PIPE CENTRES = radiator width + valves

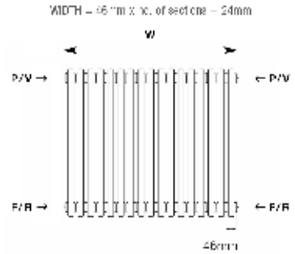

Model	Height (H) (mm)	Width (W) (mm)	Watts Δt 50°C	Btu's Δt 50°C	Bare Metal (inc VAT)	Copper, Black Nickel, Brass (inc VAT)	Weight (kgs)
2 COLUMN							
Modus-L2.500/13	500	622	481	1641	**£304.80**	£397.20	13
Modus-L2.500/17	500	806	629	2146	**£392.40**	£511.20	17
Modus-L2.500/21	500	990	777	2651	**£488.40**	£636.00	21
Modus-L2.500/26	500	1220	962	3282	**£597.60**	£777.60	26
Modus-L2.500/30	500	1404	1110	3787	**£685.20**	£891.60	30
Modus-L2.600/13	600	622	572	1952	**£313.20**	£408.00	13
Modus-L2.600/17	600	806	748	2552	**£402.00**	£523.20	17
Modus-L2.600/21	600	990	924	3153	**£501.60**	£652.80	21
Modus-L2.600/26	600	1220	1144	3903	**£614.40**	£799.20	26
Modus-L2.600/30	600	1404	1320	4504	**£699.60**	£909.60	30
3 COLUMN							
Modus-L3.500/13	500	622	663	2262	**£343.20**	£446.40	13
Modus-L3.500/17	500	806	867	2958	**£442.80**	£576.00	17
Modus-L3.500/21	500	990	1071	3654	**£550.80**	£716.40	21
Modus-L3.500/26	500	1220	1326	4524	**£675.60**	£878.40	26
Modus-L3.500/30	500	1404	1530	5220	**£775.20**	£1,008.00	30
Modus-L3.500/35	500	1634	1785	6090	**£898.80**	£1,168.80	35
Modus-L3.500/40	500	1864	2040	6960	**£1,023.60**	£1,330.80	40
Modus-L3.600/13	600	622	780	2661	**£361.20**	£470.40	13
Modus-L3.600/17	600	806	1020	3480	**£465.60**	£606.00	17
Modus-L3.600/21	600	990	1260	4299	**£577.20**	£751.20	21
Modus-L3.600/26	600	1220	1560	5323	**£709.20**	£922.80	26
Modus-L3.600/30	600	1404	1800	6142	**£813.60**	£1,058.40	30
Modus-L3.600/35	600	1634	2100	7165	**£944.40**	£1,228.80	35
Modus-L3.600/40	600	1864	2400	8189	**£1,075.20**	£1,398.00	40
Modus-L3.750/13	750	622	975	3327	**£393.60**	£512.40	13
Modus-L3.750/17	750	806	1275	4350	**£508.80**	£662.40	17
Modus-L3.750/21	750	990	1575	5374	**£632.40**	£823.20	21
4 COLUMN							
Modus-L4.500/13	500	622	845	2883	**£402.00**	£523.20	13
Modus-L4.500/17	500	806	1105	3770	**£519.60**	£675.60	17
Modus-L4.500/21	500	990	1365	4657	**£645.60**	£840.00	21
Modus-L4.500/26	500	1220	1690	5766	**£793.20**	£1,032.00	26
Modus-L4.500/30	500	1404	1950	6653	**£910.80**	£1,184.40	30
Modus-L4.500/35	500	1634	2275	7762	**£1,057.20**	£1,375.20	35
Modus-L4.500/40	500	1864	2600	8871	**£1,203.60**	£1,564.80	40
Modus-L4.600/13	600	622	1001	3415	**£427.20**	£555.60	26
Modus-L4.600/17	600	806	1309	4466	**£552.00**	£717.60	34
Modus-L4.600/21	600	990	1617	5517	**£686.40**	£892.80	42
Modus-L4.600/26	600	1220	2002	6831	**£842.40**	£1,095.60	51
Modus-L4.600/30	600	1404	2310	7882	**£968.40**	£1,260.00	60
Modus-L4.750/13	750	622	1235	4214	**£471.60**	£613.20	13
Modus-L4.750/17	750	806	1615	5510	**£610.80**	£794.40	17
Modus-L4.750/21	750	990	1995	6807	**£758.40**	£986.40	21

For finishing options see page 61

All items in bold – next working day delivery

All items not in bold – 5-7 working days delivery

MAIN IMAGE: Shown in Sky Blue RAL 5015 with Enzo Angled Valves in Polished Brass
INSET IMAGE: Shown in M02 Historic Copper

MODUS

MADE TO MEASURE

This timeless design, taken from its cast iron forefathers, has all the style of a cast radiator with the benefits of steel. Used widely for both modern and period style applications, coupled with a vast array of sizes and fixings available, the Modus is one of the most versatile radiators on the market.

E: *sales@dqheating.com* – ***T:*** *01842 810833*

MATERIAL
• Mild steel

DELIVERY
• 4-6 weeks

5 YEAR GUARANTEE

FOR FITTING INSTRUCTIONS VISIT
www.dqheating.com

TECHNICAL INFORMATION
STANDARD CONNECTIONS 1/2”
F = Flow **R** = Return **P** = Plug **V** = Vent

PIPE CENTRES = radiator width + valves

WIDTH = 46mm x no. of sections + 24mm

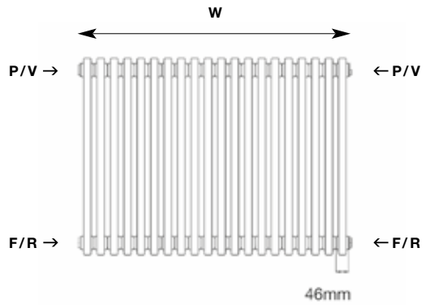

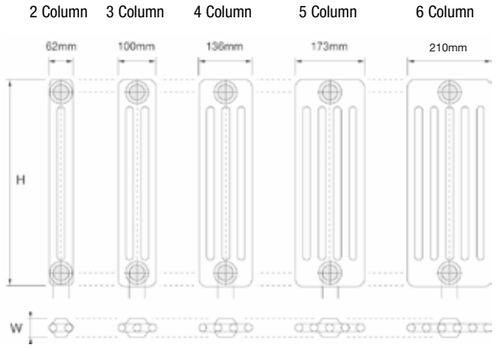

The Modus Made to Measure range is available in:

Five column depths, four available fixings, 1/2" or 3/4" tappings with various flow configurations and any RAL colour or finish shown on page 149-150 of this brochure. Standard comes with 1/2" bottom opposite end connections and finished in RAL 9016 (White). All preferences must be specified at time of order – diverter, plug, vent and wall brackets are included in the price. Each Modus section regardless of column size is 46mm wide.

Specifying your Modus Made to Measure radiator:

1 *Choose column depth.* ***2*** *Choose height (H).* ***3*** *Calculate number of sections – to do this, take the Btu output of chosen section and height from spec table, then divide your required output by this number.*
4 *Choose fixings.* ***5*** *Specify if different from standard 1/2" bottom opposite end connections in RAL 9016 (white)*

For example: you require a Modus with an output of 6000 Btu to heat your room
1 *You have chosen your column depth of 4 columns.* ***2*** *Chosen your height of 500mm.*
3 *Calculated your required number of sections (4.500 = 247 Btu, 6000 / 247 = 25 sections).*
4 *Decided on wall brackets.* ***5*** *With 1/2" bottom opposite end connections as standard in RAL 9016 (white).*
So, to meet your requirements you would need to order: Modus 4.500 x 25 sections in RAL 9016 (white) with wall brackets and 1/2" bottom opposite end connections. Output will be 6175 Btu (25 sections x 247 Btu) Length will be 1174mm (25 sections x 46mm per section + 24mm for reducing bushes).

VALVES & ACCESSORIES (Please see pages 141-148)

AVAILABLE IN THE FOLLOWING FINISHES:

Model	Height (H) (mm)	Width (W) (mm)	Watts Δt 50°C	Btu's Δt 50°C	White (Per Section) (inc VAT)	RAL Colour / Finishes (Per Section) (inc VAT)	Bare Metal Lacquer (Per Section) (inc VAT)	Copper, Black Nickel, Brass (Per Section) (inc VAT)	Weight (kgs)
2 COLUMN									
Modus 2.300	300	46	22	75	£18.69	£24.30	–	–	1
Modus 2.350	350	46	25	85	£18.74	£24.36	–	–	1
Modus 2.400	400	46	28	96	£18.74	£24.36	£24.36	£31.67	1
Modus 2.450	450	46	33	113	£18.91	£24.58	£24.58	£31.96	1
Modus 2.500	500	46	37	126	£18.91	£24.58	£24.58	£31.96	1
Modus 2.550	550	46	41	140	£19.00	£24.70	£24.70	£32.11	1
Modus 2.600	600	46	44	150	£19.56	£25.43	£25.43	£33.06	1
Modus 2.750	750	46	55	188	£20.56	£26.73	£26.73	£34.75	1
Modus 2.900	900	46	67	229	£22.48	£29.22	£29.22	£37.98	1
Modus 2.1000	1000	46	73	249	£25.00	£32.50	£32.50	£42.25	2
Modus 2.1100	1100	46	79	270	£28.34	£36.85	£36.85	£47.90	2
Modus 2.1200	1200	46	86	293	£31.65	£41.14	£41.14	£53.49	2
Modus 2.1500	1500	46	106	362	£44.39	£57.70	£57.70	£75.01	2
Modus 2.1800	1800	46	125	427	£53.26	£69.23	£69.23	£90.00	3
Modus 2.2000	2000	46	140	478	£59.69	£77.60	£77.60	£100.88	3
Modus 2.2200	2200	46	154	525	£64.38	£83.70	£83.70	£108.81	3
Modus 2.2500	2500	46	174	594	£71.43	£92.86	£92.86	£120.71	4
Modus 2.2800	2800	46	195	665	£80.08	£104.10	£104.10	£135.33	4
Modus 2.3000	3000	46	209	713	£86.25	£112.13	£112.13	£145.77	4

Model	Height (H) (mm)	Width (W) (mm)	Watts Δt 50°C	Btu's Δt 50°C	White (Per Section) (inc VAT)	RAL Colour / Finishes (Per Section) (inc VAT)	Bare Metal Lacquer (Per Section) (inc VAT)	Copper, Black Nickel, Brass (Per Section) (inc VAT)	Weight (kgs)
3 COLUMN									
Modus 3.300	300	46	31	106	£22.39	£29.11	–	–	1
Modus 3.350	350	46	36	123	£22.43	£29.16	–	–	1
Modus 3.400	400	46	41	140	£22.43	£29.16	£29.16	£37.91	1
Modus 3.450	450	46	46	157	£23.04	£29.95	£29.95	£38.94	1
Modus 3.500	500	46	51	174	£23.04	£29.95	£29.95	£38.94	1
Modus 3.550	550	46	55	188	£23.43	£30.46	£30.46	£39.60	1
Modus 3.600	600	46	60	205	£24.08	£31.31	£31.31	£40.70	1
Modus 3.750	750	46	75	256	£25.56	£33.23	£33.23	£43.20	2
Modus 3.900	900	46	89	304	£29.39	£38.20	£38.20	£49.67	2
Modus 3.1000	1000	46	98	334	£32.61	£42.39	£42.39	£55.10	2
Modus 3.1100	1100	46	107	365	£38.78	£50.41	£50.41	£65.54	2
Modus 3.1200	1200	46	116	396	£44.78	£58.21	£58.21	£75.67	3
Modus 3.1500	1500	46	143	488	£58.78	£76.41	£76.41	£99.33	3
Modus 3.1800	1800	46	170	580	£72.34	£94.04	£94.04	£122.26	4
Modus 3.2000	2000	46	189	645	£81.17	£105.52	£105.52	£137.17	4
Modus 3.2200	2200	46	208	710	£88.03	£114.44	£114.44	£148.78	5
Modus 3.2500	2500	46	236	805	£97.95	£127.33	£127.33	£165.53	5
Modus 3.2800	2800	46	262	894	£112.77	£146.60	£146.60	£190.58	6
Modus 3.3000	3000	46	281	959	£121.55	£158.02	£158.02	£205.42	6

Model	Height (H) (mm)	Width (W) (mm)	Watts Δt 50°C	Btu's Δt 50°C	White (Per Section) (inc VAT)	RAL Colour / Finishes (Per Section) (inc VAT)	Bare Metal Lacquer (Per Section) (inc VAT)	Copper, Black Nickel, Brass (Per Section) (inc VAT)	Weight (kgs)
4 COLUMN									
Modus 4.300	300	46	40	136	£27.95	£36.34	–	–	1
Modus 4.350	350	46	47	160	£28.04	£36.45	–	–	1
Modus 4.400	400	46	52	177	£28.04	£36.45	£36.45	£47.39	1
Modus 4.450	450	46	58	198	£28.13	£36.57	£36.57	£47.54	1
Modus 4.500	500	46	65	222	£28.13	£36.57	£36.57	£47.54	2
Modus 4.550	550	46	71	242	£28.43	£36.96	£36.96	£48.05	2
Modus 4.600	600	46	77	263	£28.43	£36.96	£36.96	£48.05	2
Modus 4.750	750	46	95	324	£31.52	£40.97	£40.97	£53.27	2
Modus 4.900	900	46	112	382	£36.34	£47.25	£47.25	£61.42	3
Modus 4.1000	1000	46	124	423	£38.56	£50.13	£50.13	£65.17	3
Modus 4.1100	1100	46	136	464	£48.69	£63.30	£63.30	£82.29	3
Modus 4.1200	1200	46	147	502	£58.78	£76.41	£76.41	£99.33	4
Modus 4.1500	1500	46	180	614	£72.60	£94.38	£94.38	£122.70	4
Modus 4.1800	1800	46	214	730	£88.82	£115.46	£115.46	£150.10	5
Modus 4.2000	2000	46	237	809	£98.77	£128.40	£128.40	£166.93	6
Modus 4.2200	2200	46	260	887	£107.08	£139.20	£139.20	£180.96	6
Modus 4.2500	2500	46	295	1007	£119.51	£155.36	£155.36	£201.97	7
Modus 4.2800	2800	46	328	1119	£135.94	£176.73	£176.73	£229.74	8
Modus 4.3000	3000	46	351	1198	£146.07	£189.89	£189.89	£246.86	9

E: *sales@dqheating.com* – **T:** *01842 810833*

MATERIAL
• Mild steel

DELIVERY
• 4-6 weeks

5 YEAR GUARANTEE

FOR FITTING INSTRUCTIONS VISIT
www.dqheating.com

Model	Height (H) (mm)	Width (W) (mm)	Watts Δt 50°C	Btu's Δt 50°C	White (Per Section) (inc VAT)	RAL Colour / Finishes (Per Section) (inc VAT)	Bare Metal Lacquer (Per Section) (inc VAT)	Copper, Black Nickel, Brass (Per Section) (inc VAT)	Weight (kgs)
5 COLUMN									
Modus 5.300	300	46	48	164	£31.52	£40.97	–	–	1
Modus 5.350	350	46	56	191	£31.87	£41.43	–	–	1
Modus 5.400	400	46	64	218	£32.17	£41.82	£41.82	£54.37	2
Modus 5.450	450	46	72	246	£32.47	£42.22	£42.22	£54.88	2
Modus 5.500	500	46	80	273	£32.47	£42.22	£42.22	£54.88	2
Modus 5.550	550	46	87	297	£32.78	£42.61	£42.61	£55.40	2
Modus 5.600	600	46	95	324	£33.00	£42.90	£42.90	£55.76	2
Modus 5.750	750	46	117	399	£38.17	£49.62	£49.62	£64.51	3
Modus 5.900	900	46	138	471	£44.17	£57.42	£57.42	£74.65	3
Modus 5.1000	1000	46	151	515	£49.30	£64.09	£64.09	£83.32	4
Modus 5.1100	1100	46	165	563	£58.25	£75.73	£75.73	£98.45	4
Modus 5.1200	1200	46	179	611	£67.17	£87.32	£87.32	£113.51	4
Modus 5.1500	1500	46	215	734	£88.90	£115.58	£115.58	£150.25	6
Modus 5.1800	1800	46	256	873	£108.47	£141.01	£141.01	£183.31	7
Modus 5.2000	2000	46	282	962	£119.51	£155.36	£155.36	£201.97	7
Modus 5.2200	2200	46	308	1051	£130.20	£169.27	£169.27	£220.04	8
Modus 5.2500	2500	46	347	1184	£145.81	£189.55	£189.55	£246.42	9
Modus 5.2800	2800	46	385	1314	£166.11	£215.95	£215.95	£280.73	10
Modus 5.3000	3000	46	413	1409	£179.37	£233.18	£233.18	£303.14	11

Model	Height (H) (mm)	Width (W) (mm)	Watts Δt 50°C	Btu's Δt 50°C	White (Per Section) (inc VAT)	RAL Colour / Finishes (Per Section) (inc VAT)	Bare Metal Lacquer (Per Section) (inc VAT)	Copper, Black Nickel, Brass (Per Section) (inc VAT)	Weight (kgs)
6 COLUMN									
Modus 6.300	300	46	57	194	£38.34	£49.85	–	–	2
Modus 6.350	350	46	66	225	£38.69	£50.30	–	–	2
Modus 6.400	400	46	75	256	£38.69	£50.30	£50.30	£65.39	2
Modus 6.450	450	46	84	287	£38.82	£50.47	£50.47	£65.61	2
Modus 6.500	500	46	94	321	£38.82	£50.47	£50.47	£65.61	2
Modus 6.550	550	46	103	351	£40.47	£52.62	£52.62	£68.40	3
Modus 6.600	600	46	113	386	£41.65	£54.14	£54.14	£70.38	3
Modus 6.750	750	46	137	467	£46.86	£60.92	£60.92	£79.20	3
Modus 6.900	900	46	163	556	£55.95	£72.74	£72.74	£94.56	4
Modus 6.1000	1000	46	180	614	£60.17	£78.22	£78.22	£101.68	5
Modus 6.1100	1100	46	195	665	£72.12	£93.76	£93.76	£121.89	5
Modus 6.1200	1200	46	209	713	£83.99	£109.19	£109.19	£141.95	5
Modus 6.1500	1500	46	250	853	£108.60	£141.18	£141.18	£183.53	7
Modus 6.1800	1800	46	297	1013	£131.68	£171.19	£171.19	£222.54	8
Modus 6.2000	2000	46	330	1126	£146.07	£189.89	£189.89	£246.86	9
Modus 6.2200	2200	46	359	1225	£158.07	£205.49	£205.49	£267.14	10
Modus 6.2500	2500	46	403	1375	£176.20	£229.06	£229.06	£297.78	11
Modus 6.2800	2800	46	449	1532	£194.81	£253.25	£253.25	£329.22	12
Modus 6.3000	3000	46	481	1641	£210.24	£273.31	£273.31	£355.30	13

★ *4-6 weeks delivery*

Please be aware that the Modus Lacquered range has been created to enhance the marking of the manufacturing process, this creates personal markings to each section. Please see pages 60 - 63 for more examples.

★ *ALL PRICES INCLUDE WALL BRACKETS*

AVAILABLE IN THE FOLLOWING FINISHES:

BRACKETS FOR MODUS

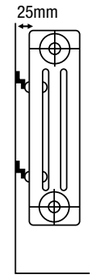

Wall Brackets

WALL BRACKETS FOR MODUS
(WALL BRACKETS ARE INCLUDED IN THE PRICE AS STANDARD)
Additional wall brackets are available at ***£42.00*** *per pair.*

(All prices shown are inc VAT)

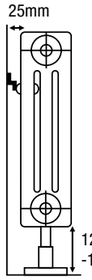

Floor Brackets

FLOOR BRACKETS FOR MODUS
(ONLY AVAILABLE IN WHITE)

Floor brackets 4-20 Sections (2 brackets)	***£69.60***
Floor brackets 21-40 Sections (3 brackets)	***£104.40***
Floor brackets 41+ Sections (4 brackets)	***£139.20***

(All prices shown are inc VAT)

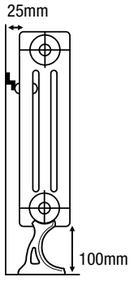

Cast Feet

CAST FOOT FOR MODUS
(NOT AVAILABLE IN THE LACQUERED RANGE)

Cast Feet 4-20 Sections (2 feet)	***£69.60***
Cast Feet 21-40 Sections (3 feet)	***£104.40***
Cast Feet 41+ Sections (4 feet)	***£139.20***

(All prices shown are inc VAT)

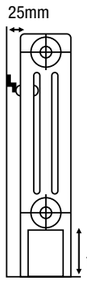

Slip-on Feet

SLIP-ON FEET FOR MODUS
(ONLY AVAILABLE FOR 2, 3 & 4 COLUMN)

Slip-on feet 4-20 Sections (2 feet)	***£69.60***
Slip-on feet 21-40 Sections (3 feet)	***£104.40***
Slip-on feet 41+ Sections (4 feet)	***£139.20***

(All prices shown are inc VAT)

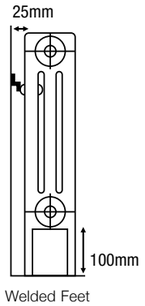

Welded Feet

WELDED FEET FOR MODUS
(ONLY AVAILABLE WITH MADE TO MEASURE RANGE)

Welded feet 4-20 Sections (2 feet)	***£139.20***
Welded feet 21-40 Sections (3 feet)	***£208.80***
Welded feet 41+ Sections (4 feet)	***£278.40***

(All prices shown are inc VAT)

- *OPTIONAL TOWEL BAR IN WHITE OR CHROME* ***+ £133.20***
  (322MM TO FIT 9 SECTION AND ABOVE)

ADDITIONAL EXTRAS:
- *UNDERNEATH CONNECTIONS + £155.40*

When ordering with feet between 21 and 40 sections, we recommend that you order an odd number of sections as these are supplied with three fixings.

E: *sales@dqheating.com* – ***T:*** *01842 810833*

MATERIAL
• Mild steel

DELIVERY
• 4-6 weeks

5 **YEAR GUARANTEE**

FOR FITTING INSTRUCTIONS VISIT
www.dqheating.com

MAIN IMAGE:
Shown in Grey Aluminium RAL 9007 with Essential Straight Valves in Chrome
INSET IMAGE:
Shown in White RAL 9010

BENCH

This superb dual purpose column radiator gives an excellent heat output, whilst the veneered oak wood top offers comfort and practicality.

E: *sales@dqheating.com* – **T:** *01842 810833*

MATERIAL
• Mild steel

DELIVERY
• 4-6 weeks

5 YEAR GUARANTEE

FOR FITTING INSTRUCTIONS VISIT
www.dqheating.com

TECHNICAL INFORMATION
STANDARD CONNECTIONS 1/2”
F = Flow
R = Return
V = Vent

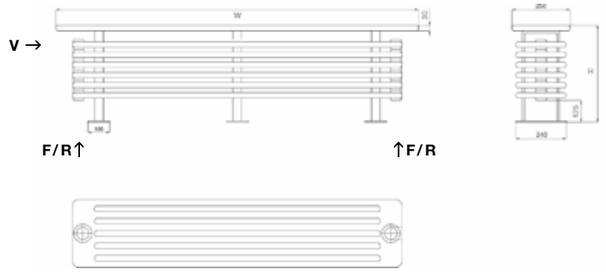

Model	Height (H) (mm)	Width (W) (mm)	Pipe Centres (mm)	Watts Δt 50°C	Btu's Δt 50°C	White (inc VAT)	RAL Colour / Finishes (inc VAT)	Weight (kgs)
5 COLUMN								
Bench 5/700	434	700	530	565	1928	£774.00	£1,006.80	26
Bench 5/850	434	850	680	685	2337	£850.80	£1,107.60	29
Bench 5/1000	434	1000	830	815	2781	£945.60	£1,228.80	34
Bench 5/1300	434	1300	1130	1045	3566	£1,167.60	£1,518.00	42
Bench 5/1600	434	1600	1430	1250	4265	£1,412.40	£1,836.00	48
Bench 5/1900	434	1900	1730	1485	5067	£1,618.80	£2,104.80	54
Bench 5/2100	434	2100	1930	1650	5630	£1,755.60	£2,282.40	60
Bench 5/2600	434	2600	2430	2015	6875	£2,175.60	£2,827.20	80
Bench 5/2900	434	2900	2730	2245	7660	£2,385.60	£3,099.60	87
6 COLUMN								
Bench 6/700	480	700	530	678	2313	£817.20	£1,063.20	30
Bench 6/850	480	850	680	822	2805	£898.80	£1,167.60	34
Bench 6/1000	480	1000	830	978	3337	£1,000.80	£1,302.00	41
Bench 6/1300	480	1300	1130	1254	4279	£1,251.60	£1,627.20	50
Bench 6/1600	480	1600	1430	1500	5118	£1,520.40	£1,976.40	58
Bench 6/1900	480	1900	1730	1782	6080	£1,744.80	£2,268.00	68
Bench 6/2100	480	2100	1930	1980	6756	£1,892.40	£2,460.00	77
Bench 6/2600	480	2600	2430	2418	8250	£2,341.20	£3,043.20	86
Bench 6/2900	480	2900	2730	2694	9192	£2,448.00	£3,183.60	104

★ *4-6 weeks for delivery*

VALVES & ACCESSORIES
(Please see pages 141-148)

Other wooden bench tops are available on request.

AVAILABLE IN THE FOLLOWING FINISHES:

TRENCH

HEATING

High thermal output and energy efficiency complemented by minimum noise level! Our new and improved Trench Heaters use silent fans with forced convection to achieve a very high thermal efficiency within small depths, allowing the Trench to be used in many environments, especially rooms with large glazed partitions.

***E:** sales@dqheating.com – **T:** 01842 810833*

VERANO KONWEKTOR

We can supply Trench Heating with the option of Oak or Aluminium top grills, please specify at the time of order.

ALUMINIUM

OAK

- *Casing made of galvanised steel sheet in RAL 9005 black.*
- *Highly efficient copper-aluminium heat exchanger with air vent.*
- *Modern fan with silent and efficient 24 V DC motor.*
- *Fastening anchors*
- *Trench positioning adjustment system.*
- *Decorative frames that run around the trench casing.*
- *Choice of either aluminium or oak top grille (please specify at time of order).*
- *New Wi-Fi digital room thermostat.*

Model	Length (mm)	Width (mm)	Depth (mm)	Watts Δt 50°C	Btu's Δt 50°C	Price (inc VAT)	Weight (kgs)
Trench S850	850	250	100	283-820	966-2798	**£1,659.60**	12
Trench S1250	1250	250	100	579-1676	1976-5719	**£1,848.00**	15
Trench S1650	1650	250	100	669-1939	2283-6616	**£2,168.40**	18
Trench S2050	2050	250	100	873-2528	2979-8626	**£2,494.80**	25

★ *For other sizes please contact our sales office on 01842 810833* ★ *Next working day delivery*

MATERIAL
• Aluminium

DELIVERY
• Next working day

5 YEAR GUARANTEE

FOR FITTING INSTRUCTIONS & APP FUNCTIONS VISIT
www.dqheating.com

MAIN IMAGE:
Shown in Anthracite RAL 7016 Matt
INSET IMAGE:
Shown in White RAL 9016 Matt

VELA

ELECTRIC

The new improved Vela electric is now both Wi-Fi and Bluetooth compatible, and can be controlled via an app on your smart phone. With many different functions and programmes available, including the ability to control multiple Vela Electrics, you can personalise your heating needs to suit your lifestyle.

***E:** sales@dqheating.com – **T:** 01842 810833*

RADIATORI 2000 SMART
Google play
App Store

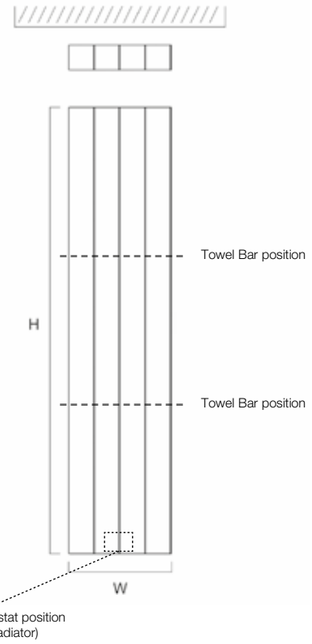

VERTICAL

Wall to front face = 107mm

IP rating of IPX4

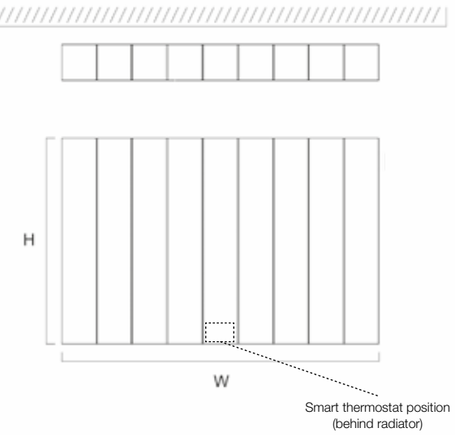

HORIZONTAL

Model	Height (H) (mm)	Width (W) (mm)	Electric Element Wattage	White Matt (inc VAT)	Anthracite Matt (inc VAT)	Weight (kgs)
VERTICAL						
Vela-WE 180/3	1800	367	1500	**£1,176.00**	**£1,176.00**	21
Vela-WE 180/4	1800	488	2000	**£1,384.80**	**£1,384.80**	27
HORIZONTAL						
Vela-WE 60/3	600	367	600	**£825.60**	**£825.60**	7
Vela-WE 60/5	600	610	1000	**£1,093.20**	**£1,093.20**	11
Vela-WE 60/7	600	853	1400	**£1,377.60**	**£1,377.60**	15
Vela-WE 60/9	600	1096	1800	**£1,662.00**	**£1,662.00**	19

★ *Next working day delivery*

VALVES & ACCESSORIES
(Please see pages 141-148)

ADDITIONAL EXTRAS:
- *ADDITIONAL TOWEL BAR IN POLISHED. SIZES 367MM & 488MM FOR VERTICAL ONLY* ***+ £139.20 EACH***

OPTIONAL REMOTE CONTROL ***£120.00*** *(ON REQUEST ONLY)*

AVAILABLE IN THE FOLLOWING FINISHES:

MAIN IMAGE:
Shown in White RAL 9016 with H+H Element in White

MODUS

ELECTRIC

The electric only version of our classic Modus column radiator is now available with a wifi heating element to fully comply with the new EcoDesign Directive legislation. Lot 20 is new EU legislation designed to remove inefficient technologies and reduce the energy used by products that heat our homes. This will help to achieve the UK's overall carbon reduction targets. The radiator and element are available in a massive selection of finishes to suit your exact requirements. To see exactly which colours are available on each product, please see pages 149 & 150 for the radiator finishes and pages 138 & 140 for the elements - ***E:*** *sales@dqheating.com –* ***T:*** *01842 810833*

MATERIAL
• Mild steel

DELIVERY
• All items in bold 1 week

5 YEAR GUARANTEE
(2 years on element)

FOR FITTING INSTRUCTIONS & APP FUNCTIONS VISIT
www.dqheating.com

NEW

SUPLA

Google play

App Store

WiFi

WIDTH = radiator + element

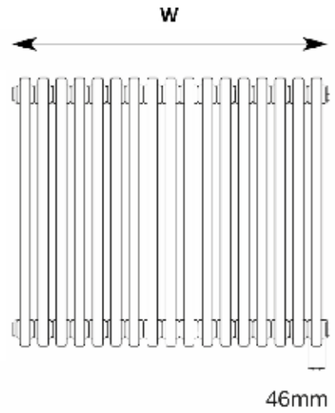

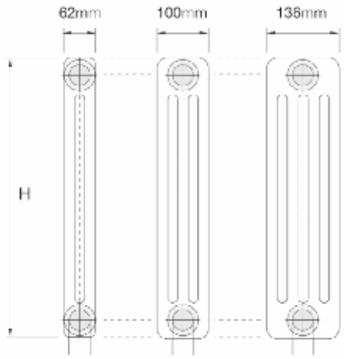

Model	Height (H) (mm)	Width (W) (mm)	No. of Sections	Electric Element Wattage	White 9016 (inc VAT)	RAL Colour Finishes (inc VAT)	Weight (kgs)
2 COLUMN							
Modus-E 2.600/13	600	692	13	600	**£496.80**	£645.60	21
Modus-E 2.600/17	600	876	17	900	**£622.80**	£810.00	27
Modus-E 2.600/21	600	1060	21	1200	**£750.00**	£975.60	34
3 COLUMN							
Modus-E 3.600/13	600	692	13	900	**£525.60**	£682.80	30
Modus-E 3.600/17	600	876	17	1200	**£664.80**	£864.00	39
Modus-E 3.600/21	600	1060	21	1500	**£806.40**	£1,048.80	49
4 COLUMN							
Modus-E 4.600/13	600	692	13	1200	**£567.60**	£738.00	42
Modus-E 4.600/17	600	876	17	1500	**£729.60**	£948.00	55
Modus-E 4.600/21	600	1060	21	2000	**£890.40**	£1,158.00	67

★ *All items in bold – 1 week* ★ *All items not in bold – 2 weeks*

Please specifiy at time of order which element finish you require

VALVES & ACCESSORIES (Please see pages 138-148)

Controller

AVAILABLE IN THE FOLLOWING FINISHES:

White 9016 | *RAL Colour page 149* | *Finishes page 150*

MAIN AND INSET IMAGE:
Shown in Anthracite 7016 Texture with Essential Angled Valves in Chrome

NEW

AZURA

The brand new Azura is a jewel of a towel rail that showcases its beautiful curves. This prestigious model is not only exceedingly attractive to the eye, but also very practical for your daily use.

E: *sales@dqheating.com* – ***T:*** *01842 810833*

TECHNICAL INFORMATION
STANDARD CONNECTIONS 1/2”
F = Flow **R** = Return **P** = Plug **V** = Vent

Wall to front face = 148-159mm
Wall to pipe centre = 64-75mm

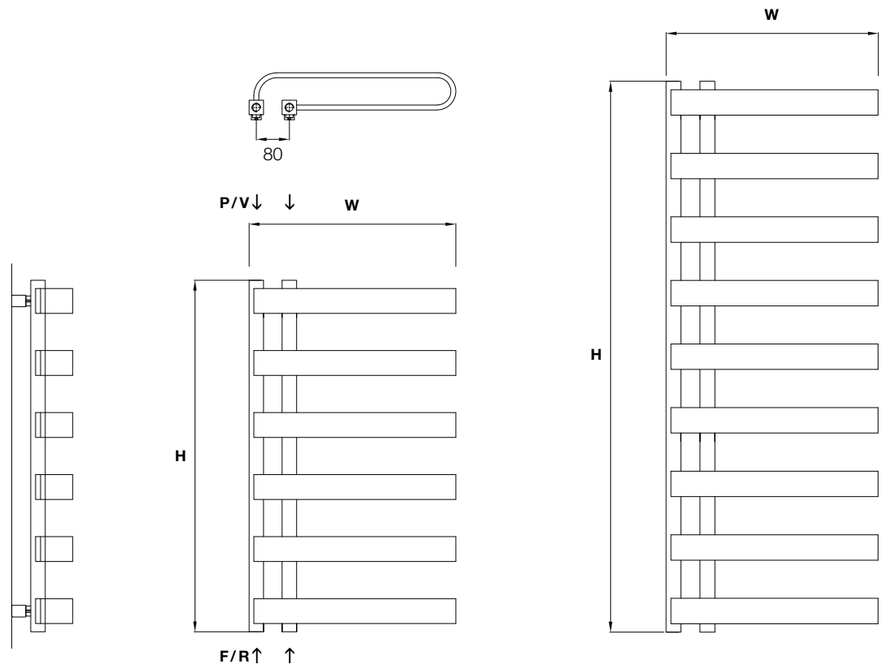

Model	Height (H) (mm)	Width (W) (mm)	Pipe Centres (mm)	Watts Δt 50°C	Btu's Δt 50°C	Electric Element Wattage	White 9016 (inc VAT)	Anthracite 7016 Texture (inc VAT)	RAL Colour Finishes (inc VAT)	Weight (kgs)
Azura 50/80	850	500	80	520	1774	300	**£249.60**	**£249.60**	£325.20	12
Azura 50/130	1300	500	80	784	2673	600	**£350.40**	**£350.40**	£454.80	18

★ *All items in bold – Next working day delivery* ★ *All items not in bold – 5-7 working days delivery*

The Azura can be mounted right or left handed

VALVES & ACCESSORIES
(Please see pages 138-148)

ADDITIONAL EXTRAS:
- *ELECTRIC VERSION (ESSENTIAL ELEMENT)* ***+ £120.00***
- *DUAL FUEL VERSION (PLEASE ADD PRICE OF CORRECT SIZE ELEMENT IN ACCESSORIES PAGE)*

MAIN AND INSET IMAGE:
Shown in Infinity Steel with Essential Angled Valves in Chrome

TESORO

With its eye-catching sleek curves and high output, the Tesoro towel rail is a harmonius blend of style and practicality. The Tesoro is also available in both central heating and electric.

E: *sales@dqheating.com* – **T:** *01842 810833*

MATERIAL
• Mild steel

DELIVERY
• All items in bold next working day

5 YEAR GUARANTEE

FOR FITTING INSTRUCTIONS VISIT
www.dqheating.com

TECHNICAL INFORMATION
STANDARD CONNECTIONS 1/2”
F = Flow **R** = Return **P** = Plug **V** = Vent

Wall to front face = 155-165mm
Wall to pipe centre = 60-70mm

The Tesoro can be finished in our “Infinity Steel” PVD finish, which stands for physical vapor deposition; a process used to create a very durable, corrosion and tarnish resistant finish. PVD finish is commonly used for bathroom fixtures which are exposed to frequent moisture.

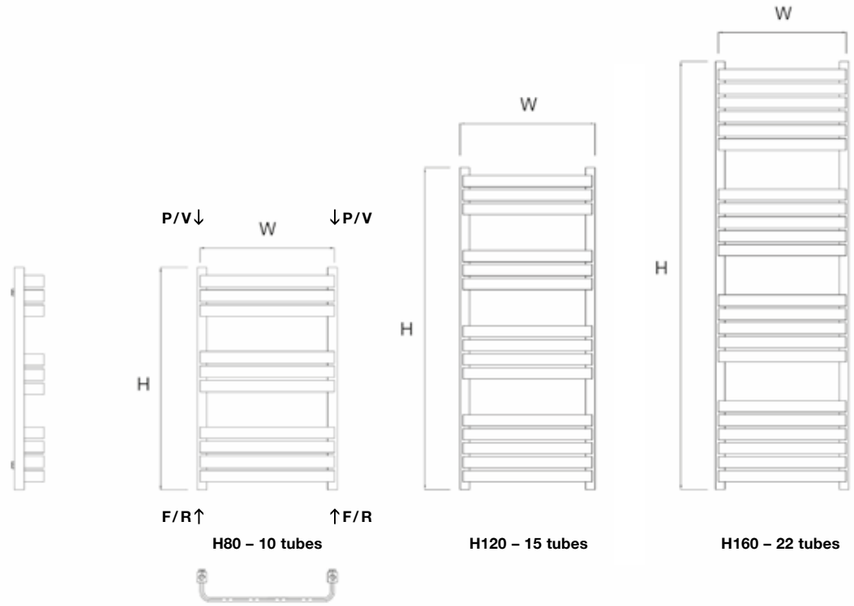

H80 – 10 tubes | **H120 – 15 tubes** | **H160 – 22 tubes**

Model	Height (H) (mm)	Width (W) (mm)	Pipe Centres (mm)	Watts Δt 50°C	Btu’s Δt 50°C	Electric Element Wattage	White Anthracite (inc VAT)	RAL Colour Finishes (inc VAT)	Infinity Steel (inc VAT)	Weight (kgs)
Tesoro 50/80	800	500	465	523	1785	300	**£261.60**	£340.80	**£397.20**	10
Tesoro 50/120	1200	500	465	785	2678	600	**£362.40**	£471.60	**£586.80**	14
Tesoro 50/160	1600	500	465	1126	3844	900	**£516.00**	£670.80	**£775.20**	20

All items in bold – Next working day delivery *All items not in bold – 5-7 working days delivery*

VALVES & ACCESSORIES
(Please see pages 138-148)

ADDITIONAL EXTRAS:
- *ELECTRIC VERSION (ESSENTIAL ELEMENT)* ***+ £120.00***
- *DUAL FUEL VERSION (PLEASE ADD PRICE OF CORRECT SIZE ELEMENT IN ACCESSORIES PAGE)*

AVAILABLE IN THE FOLLOWING FINISHES:

White 9016 | *Anthracite 7016 Texture* | *RAL Colour page 149* | *Finishes page 150* | *Infinity Steel*

MAIN AND INSET IMAGE:
Shown in Infinity Steel with Essential Angled Valves in Chrome

STALIA

A simple yet elegant design that would look fitting in both a contemporary and modern surround. Available in a wide range of striking colours and finishes, enabling you to make a bespoke towel rail to complement any décor. The Stalia is also available in both central heating and electric.

E: *sales@dqheating.com* – ***T:*** *01842 810833*

MATERIAL
• Mild steel

DELIVERY
• All items in bold next working day

5 YEAR GUARANTEE

FOR FITTING INSTRUCTIONS VISIT
www.dqheating.com

TECHNICAL INFORMATION
STANDARD CONNECTIONS 1/2”
F = Flow **R** = Return **P** = Plug **V** = Vent

Wall to front face = 79-89mm
Wall to pipe centre = 60-70mm

The Stalia can be finished in our “Infinity Steel” PVD finish, which stands for physical vapor deposition; a process used to create a very durable, corrosion and tarnish resistant finish. PVD finish is commonly used for bathroom fixtures which are exposed to frequent moisture.

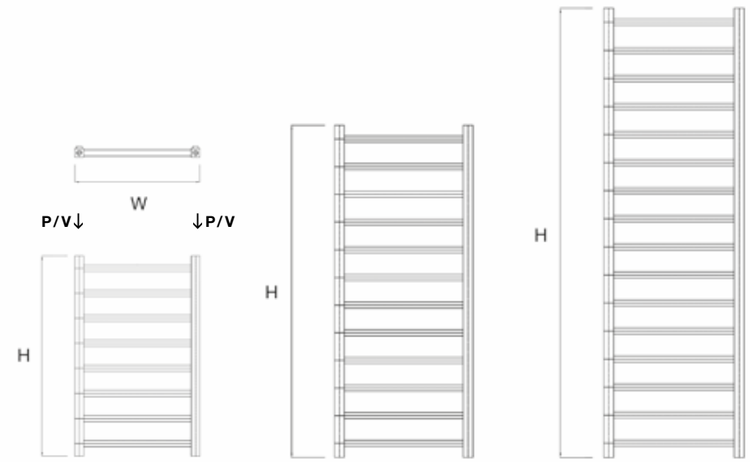

H80 – 8 tubes **H120 – 12 tubes** **H160 – 16 tubes**

Model	Height (H) (mm)	Width (W) (mm)	Pipe Centres (mm)	Watts Δt 50°C	Btu’s Δt 50°C	Electric Element Wattage	White Anthracite (inc VAT)	RAL Colour Finishes (inc VAT)	Infinity Steel (inc VAT)	Weight (kgs)
Stalia 50/80	800	500	465	285	973	300	**£133.20**	£234.00	**£277.20**	6
Stalia 50/120	1200	500	465	428	1461	300	**£178.80**	£279.60	**£374.40**	9
Stalia 50/160	1600	500	465	570	1947	600	**£234.00**	£334.80	**£476.40**	12

★ *All items in bold – Next working day delivery* ★ *All items not in bold – 5-7 working days delivery*

VALVES & ACCESSORIES
(Please see pages 138-148)

ADDITIONAL EXTRAS:
- *ELECTRIC VERSION (ESSENTIAL ELEMENT)* ***+ £120.00***
- *DUAL FUEL VERSION (PLEASE ADD PRICE OF CORRECT SIZE ELEMENT IN ACCESSORIES PAGE)*

AVAILABLE IN THE FOLLOWING FINISHES:

MAIN AND INSET IMAGE:
Shown in Black RAL 9005 Matt with additional Oak wood shelves with Essential Straight Valves in Chrome

OAKHAM

This sleek, slimline towel rail will compliment your bathroom and offer excellent versatility. With additional shelves that can be purchased in either Beech, Oak or Teak, this is a must for where space is at a premium.

E: *sales@dqheating.com* – ***T:*** *01842 810833*

TECHNICAL INFORMATION
STANDARD CONNECTIONS 1/2”
F = Flow **R** = Return **P** = Plug **V** = Vent

Wall to front face = 72-80mm
Wall to pipe centre = 57-65mm

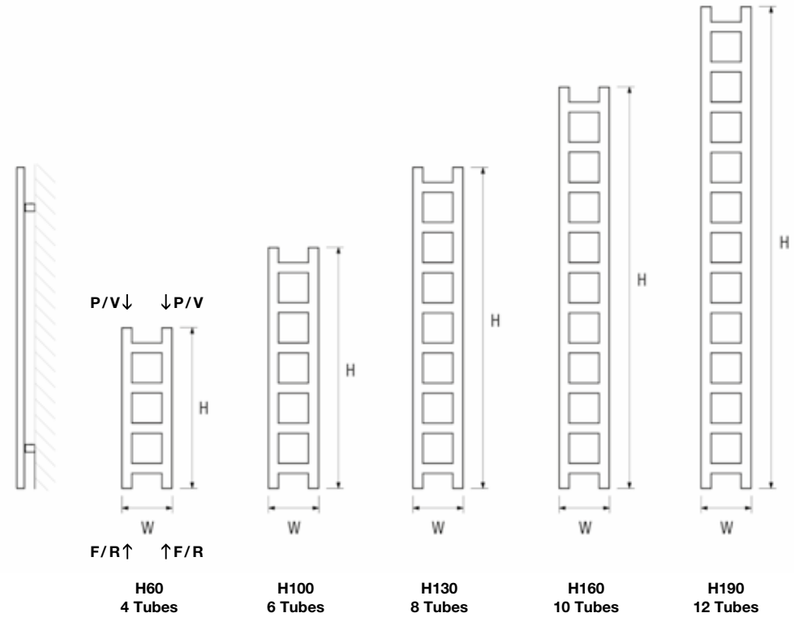

Please note: Additional wood shelves can be added to any of the bars.

Model	Height (H) (mm)	Width (W) (mm)	Pipe Centres (mm)	Watts Δt 50°C	Btu’s Δt 50°C	Electric Element Wattage	White (inc VAT)	Black 9005 Matt (inc VAT)	RAL Colour Finishes (inc VAT)	Weight (kgs)
Oakham 60	640	200	160	124	423	150	**£278.40**	**£278.40**	£379.20	4
Oakham 100	960	200	160	187	638	300	**£326.40**	**£326.40**	£427.20	5
Oakham 130	1280	200	160	251	856	300	**£394.80**	**£394.80**	£495.60	6
Oakham 160	1600	200	160	314	1071	300	**£466.80**	**£466.80**	£567.60	7
Oakham 190	1920	200	160	378	1290	400	**£531.60**	**£531.60**	£632.40	9

All items in bold – Next working day delivery *All items not in bold – 5-7 working days

VALVES & ACCESSORIES
(Please see pages 138-148)

ADDITIONAL EXTRAS:
- *ELECTRIC VERSION (ESSENTIAL ELEMENT)* ***+ £120.00***
- *DUAL FUEL VERSION (PLEASE ADD PRICE OF CORRECT SIZE ELEMENT IN ACCESSORIES PAGE)*
- *ADDITIONAL OAKHAM WOOD SHELF IN BEECH* ***+ £78.00 EACH***
- *ADDITIONAL OAKHAM WOOD SHELF IN OAK* ***+ £78.00 EACH***
- *ADDITIONAL OAKHAM WOOD SHELF IN TEAK* ***+ £159.60 EACH***

AVAILABLE IN THE FOLLOWING FINISHES:

White 9016 | *Black 9005 Matt* | *RAL Colour page 149* | *Finishes page 150*

MAIN IMAGE: Shown in Black RAL 9005 Matt with additional Oak wood shelves with Essential Straight Valves in Chrome
INSET IMAGE: Pigeon blue RAL 5014

FENDER

Like the Slimline Oakham, the Fender offers great versatility; with three shelf options this towel rail can be transformed into part of the bathroom furniture. The additional shelves can be fitted to any bar and can be purchased in a high quality Beech, Oak or Teak finish.

E: *sales@dqheating.com* – ***T:*** *01842 810833*

TECHNICAL INFORMATION
STANDARD CONNECTIONS 1/2”
F = Flow **R** = Return **P** = Plug **V** = Vent

Wall to front face = 72-80mm
Wall to pipe centre = 57-65mm

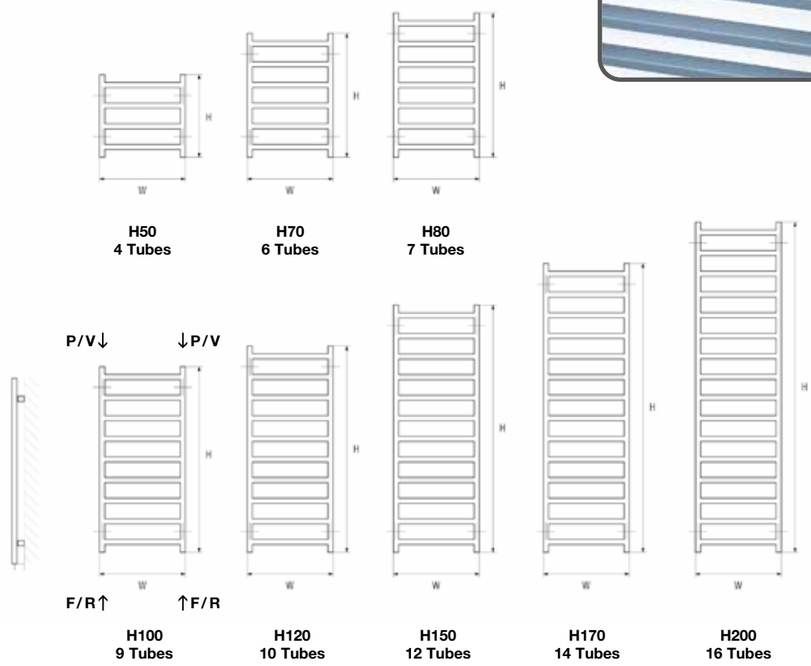

H50 4 Tubes **H70 6 Tubes** **H80 7 Tubes**

H100 9 Tubes **H120 10 Tubes** **H150 12 Tubes** **H170 14 Tubes** **H200 16 Tubes**

Please note: Additional wood shelves can be added to any of the bars.

Model	Height (H) (mm)	Width (W) (mm)	Pipe Centres (mm)	Watts Δt 50°C	Btu's Δt 50°C	Electric Element Wattage	White (inc VAT)	Black 9005 Matt (inc VAT)	RAL Colour / Finishes (inc VAT)	Weight (kgs)
Fender 50	480	500	470	173	590	150	**£278.40**	**£278.40**	£379.20	4
Fender 70	720	500	470	262	894	300	**£351.60**	**£351.60**	£452.40	6
Fender 80	840	500	470	306	1044	300	**£373.20**	**£373.20**	£474.00	7
Fender 100	1080	500	470	396	1351	400	**£420.00**	**£420.00**	£520.80	9
Fender 120	1200	500	470	440	1501	400	**£466.80**	**£466.80**	£567.60	9
Fender 150	1440	500	470	529	1805	600	**£513.60**	**£513.60**	£614.40	11
Fender 170	1680	500	470	618	2109	600	**£604.80**	**£604.80**	£705.60	13
Fender 200	1920	500	470	707	2412	900	**£651.60**	**£651.60**	£752.40	15

★ *All items in bold – Next working day delivery* ★ *All items not in bold – 5-7 working days*

VALVES & ACCESSORIES
(Please see pages 138-148)

ADDITIONAL EXTRAS:
- *ELECTRIC VERSION (ESSENTIAL ELEMENT)* ***+ £120.00***
- *DUAL FUEL VERSION (PLEASE ADD PRICE OF CORRECT SIZE ELEMENT IN ACCESSORIES PAGE)*
- *ADDITIONAL FENDER WOOD SHELF IN BEECH* ***+ £109.20***
- *ADDITIONAL FENDER WOOD SHELF IN OAK* ***+ £109.20***
- *ADDITIONAL FENDER WOOD SHELF IN TEAK* ***+ £267.60***

AVAILABLE IN THE FOLLOWING FINISHES:

MAIN IMAGE: Shown in Signal Black RAL 9004 Matt with Essential Angled Valves in Chrome
INSET IMAGE: Shown in Cream RAL 9001

VULCANO T

The Italian manufactured Vulcano is a high quality product with contemporary tube on tube styling, giving it pleasing characteristics and great heat output.

E: *sales@dqheating.com* – ***T:*** *01842 810833*

LOW WATER CONTENT

MATERIAL
• Mild steel

DELIVERY
• All items in bold 5-7 working days

5 YEAR GUARANTEE

FOR FITTING INSTRUCTIONS VISIT
www.dqheating.com

TECHNICAL INFORMATION
STANDARD CONNECTIONS 1/2”
F = Flow **R** = Return **P** = Plug **V** = Vent

Wall to front face = 105mm
Wall to pipe centre = 70mm

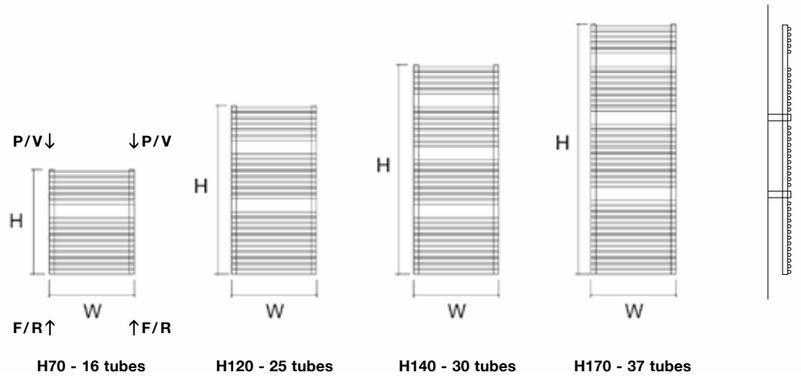

H70 - 16 tubes | **H120 - 25 tubes** | **H140 - 30 tubes** | **H170 - 37 tubes**

Model	Height (H) (mm)	Width (W) (mm)	Pipe Centres (mm)	Watts Δt 50°C	Btu’s Δt 50°C	Electric Element Wattage	White (inc VAT)	F04 – Dark Grey Texture (inc VAT)	RAL Colour Finishes (inc VAT)	Weight (kgs)
VUT 50/70	720	486	450	361	1232	300	£372.00	£484.80	£484.80	9
VUT 50/120	1160	486	450	587	2003	300	£495.60	£643.20	£643.20	15
VUT 50/140	1440	486	450	677	2310	600	£580.80	£756.00	£756.00	18
VUT 50/170	1720	486	450	790	2695	600	£810.00	£1,052.40	£1,052.40	21
VUT 60/70	720	586	550	435	1484	300	**£434.40**	**£562.80**	**£562.80**	11
VUT 60/120	1160	586	550	708	2416	600	**£548.40**	**£712.80**	**£712.80**	18
VUT 60/140	1440	586	550	816	2784	600	**£633.60**	**£823.20**	**£823.20**	21
VUT 60/170	1720	586	550	953	3252	900	**£862.80**	**£1,122.00**	**£1,122.00**	24
VUT 75/70	720	746	710	554	1890	300	£475.20	£616.80	£616.80	13
VUT 75/120	1160	746	710	901	3074	600	£601.20	£781.20	£781.20	22
VUT 75/140	1440	746	710	1039	3545	900	£740.40	£962.40	£962.40	25
VUT 75/170	1720	746	710	1213	4139	900	£915.60	£1,191.60	£1,191.60	30

All items in bold – 5-7 working days

All items not in bold – 4-6 weeks delivery

VALVES & ACCESSORIES
(Please see pages 138-148)

ADDITIONAL EXTRAS:
- *ELECTRIC VERSION (ESSENTIAL ELEMENT)* ***+ £120.00***
- *DUAL FUEL VERSION (PLEASE ADD PRICE OF CORRECT SIZE ELEMENT IN ACCESSORIES PAGE)*

AVAILABLE IN THE FOLLOWING FINISHES:

White 9016 | *F04 - Dark Grey Texture* | *RAL Colour page 149* | *Finishes page 150*

MAIN IMAGE:
Shown in Signal Violet RAL 4008 with Esssential Angled Valves in Chrome
INSET IMAGE:
Shown in White RAL 9016

CUBE T

The Cube T is a beautifully crafted, elegant towel rail capable of re-shaping the look of any bathroom. Italian manufactured with unique u-shaped square tubes, this is an exceptionally individual bathroom product.

E: *sales@dqheating.com – **T:** 01842 810833*

LOW WATER CONTENT

MATERIAL
• Mild steel

DELIVERY
• All items in bold 5-7 working days

5 YEAR GUARANTEE

FOR FITTING INSTRUCTIONS VISIT
www.dqheating.com

TECHNICAL INFORMATION
STANDARD CONNECTIONS 1/2”
F = Flow **R** = Return **P** = Plug **V** = Vent

Wall to front face = 125mm
Wall to pipe centre = 80mm

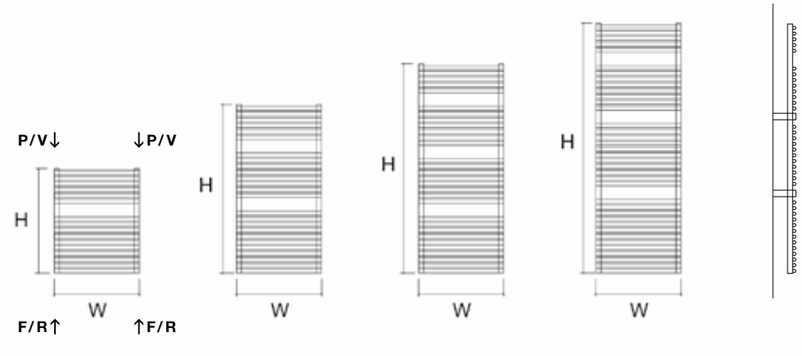

H80 - 16 tubes **H120 - 25 tubes** **H150 - 30 tubes** **H180 - 37 tubes**

Model	Height (H) (mm)	Width (W) (mm)	Pipe Centres (mm)	Watts Δt 50°C	Btu’s Δt 50°C	Electric Element Wattage	White (inc VAT)	F04 – Dark Grey Texture (inc VAT)	RAL Colour Finishes (inc VAT)	Weight (kgs)
CUT 50/80	720	486	450	486	1658	300	£630.00	£819.60	£819.60	11
CUT 50/120	1163	486	450	790	2695	600	£837.60	£1,089.60	£1,089.60	18
CUT 50/150	1440	486	450	912	3112	900	£985.20	£1,280.40	£1,280.40	20
CUT 50/180	1720	486	450	1064	3630	900	£1,374.00	£1,785.60	£1,785.60	24
CUT 60/80	720	586	550	586	1999	600	**£730.80**	**£949.20**	**£949.20**	13
CUT 60/120	1163	586	550	935	3190	900	**£924.00**	**£1,201.20**	**£1,201.20**	21
CUT 60/150	1440	586	550	1099	3750	900	**£1,075.20**	**£1,396.80**	**£1,396.80**	24
CUT 60/180	1720	586	550	1283	4378	900	**£1,464.00**	**£1,904.40**	**£1,904.40**	28
CUT 75/80	720	746	710	747	2549	600	£806.40	£1,048.80	£1,048.80	16
CUT 75/120	1163	746	710	1213	4139	900	£1,029.60	£1,338.00	£1,338.00	26
CUT 75/150	1440	746	710	1399	4773	900	£1,257.60	£1,634.40	£1,634.40	30
CUT 75/180	1720	746	710	1633	5572	900	£1,629.60	£2,116.80	£2,116.80	35

All items in bold – 5-7 working days

All items not in bold – 4-6 weeks delivery

VALVES & ACCESSORIES
(Please see pages 138-148)

ADDITIONAL EXTRAS:
- *ELECTRIC VERSION (ESSENTIAL ELEMENT) + **£120.00***
- *DUAL FUEL VERSION (PLEASE ADD PRICE OF CORRECT SIZE ELEMENT IN ACCESSORIES PAGE)*

AVAILABLE IN THE FOLLOWING FINISHES:

White 9016 | *F04 - Dark Grey Texture* | *RAL Colour page 149* | *Finishes page 150*

MAIN IMAGE:
Shown in May Green RAL 6017 with Essential Square Angled Valves in Chrome

INSET IMAGE:
Shown in F04 Dark Grey Texture

TORNADO T

The Tornado T with patented 68mm flat tubes is a timeless classic with exceptional build quality. With many different colour options this Italian towel rail is an ideal solution to heating your bathroom in style.

E: *sales@dqheating.com – **T:** 01842 810833*

MATERIAL
• Mild steel

DELIVERY
• All items in bold 5-7 working days

5 YEAR GUARANTEE

FOR FITTING INSTRUCTIONS VISIT
www.dqheating.com

TECHNICAL INFORMATION
STANDARD CONNECTIONS 1/2”
F = Flow **R** = Return **P** = Plug **V** = Vent

Wall to front face = 105mm
Wall to pipe centre = 70mm

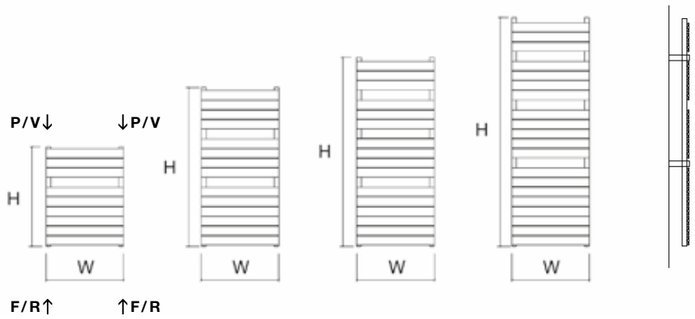

H80 - 9 tubes **H120 - 14 tubes** **H150 - 16 tubes** **H180 - 20 tubes**

Model	Height (H) (mm)	Width (W) (mm)	Pipe Centres (mm)	Watts Δt 50°C	Btu’s Δt 50°C	Electric Element Wattage	White (inc VAT)	F04 – Dark Grey Texture (inc VAT)	RAL Colour Finishes (inc VAT)	Weight (kgs)
TOT 50/80	750	486	450	567	1935	300	£358.80	£465.60	£465.60	10
TOT 50/120	1200	486	450	718	2450	600	£418.80	£543.60	£543.60	15
TOT 50/150	1440	486	450	865	2951	600	£553.20	£718.80	£718.80	19
TOT 50/180	1720	486	450	1169	3989	900	£648.00	£842.40	£842.40	23
TOT 60/80	750	586	550	680	2320	600	**£367.20**	**£476.40**	**£476.40**	12
TOT 60/120	1200	586	550	860	2934	600	**£436.80**	**£567.60**	**£567.60**	17
TOT 60/150	1440	586	550	1048	3576	900	**£573.60**	**£746.40**	**£746.40**	22
TOT 60/180	1720	586	550	1395	4760	900	**£681.60**	**£886.80**	**£886.80**	27
TOT 75/80	750	746	710	813	2774	600	£410.40	£532.80	£532.80	15
TOT 75/120	1200	746	710	1096	3740	900	£478.80	£621.60	£621.60	21
TOT 75/150	1440	746	710	1279	4364	900	£613.20	£798.00	£798.00	27
TOT 75/180	1720	746	710	1692	5773	900	£734.40	£954.00	£954.00	33

All items in bold – 5-7 working days

All items not in bold – 4-6 weeks delivery

VALVES & ACCESSORIES
(Please see pages 138-148)

ADDITIONAL EXTRAS:
- *ELECTRIC VERSION (ESSENTIAL ELEMENT) **+ £120.00***
- *DUAL FUEL VERSION (PLEASE ADD PRICE OF CORRECT SIZE ELEMENT IN ACCESSORIES PAGE)*

AVAILABLE IN THE FOLLOWING FINISHES:

White 9016 | *F04 - Dark Grey Texture* | *RAL Colour page 149* | *Finishes page 150*

MAIN IMAGE:
Shown in Chrome with Essential Corner TRV in Chrome
INSET IMAGE:
Shown in Chrome

METRO

Industry standard straight fronted ladder rail, the tried and tested Metro, with 25mm tubes, is available in a large selection of sizes to suit most applications.

E: *sales@dqheating.com* – ***T:*** *01842 810833*

MATERIAL
• Mild steel

DELIVERY
• All items in bold next working day

5 YEAR GUARANTEE

FOR FITTING INSTRUCTIONS VISIT
www.dqheating.com

TECHNICAL INFORMATION
STANDARD CONNECTIONS 1/2”
F = Flow **R** = Return

Wall to front face = 87-97mm
Wall to pipe centre = 78-88mm

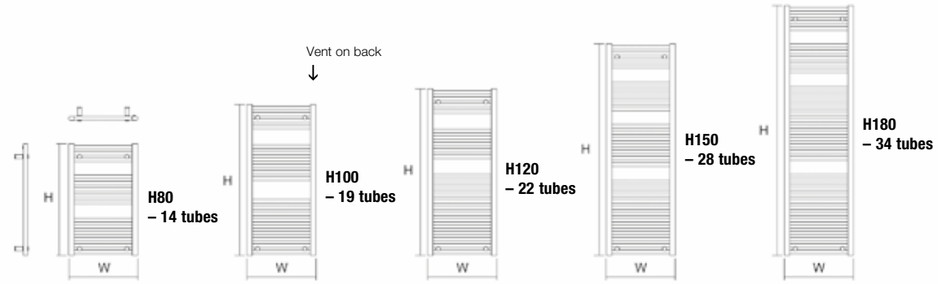

Please note: Chrome finish reduces output by up to 20%.

Model	Height (H) (mm)	Width (W) (mm)	Pipe Centres (mm)	Watts Δt 50°C	Btu's Δt 50°C	Electric Element Wattage	White (inc VAT)	Chrome (inc VAT)	RAL Colour Finishes (inc VAT)	Weight (kgs)
Metro 30/80	800	300	255	325	1109	300	**£70.80**	**£91.20**	£171.60	5
Metro 30/120	1200	300	255	490	1672	300	**£96.00**	**£123.60**	£196.80	8
Metro 40/80	800	400	355	370	1263	300	**£79.20**	**£109.20**	£180.00	6
Metro 40/120	1200	400	355	530	1809	300	**£105.60**	**£154.80**	£206.40	9
Metro 40/180	1800	400	355	840	2866	900	**£151.20**	**£212.40**	£252.00	13
Metro 50/80	800	500	455	420	1433	300	**£85.20**	**£114.00**	£186.00	7
Metro 50/100	1000	500	455	538	1836	300	–	**£146.40**	–	9
Metro 50/120	1200	500	455	600	2047	600	**£114.00**	**£162.00**	£214.80	11
Metro 50/150	1500	500	455	750	2559	600	**£128.40**	**£208.80**	£229.20	13
Metro 50/180	1800	500	455	925	3156	900	**£166.80**	**£243.60**	£267.60	16
Metro 60/80	800	600	555	445	1518	300	**£94.80**	**£128.40**	£195.60	8
Metro 60/100	1000	600	555	589	2010	600	–	**£160.80**	–	10
Metro 60/120	1200	600	555	710	2422	600	**£124.80**	**£180.00**	£225.60	12
Metro 60/150	1500	600	555	900	3070	600	**£140.40**	**£234.00**	£241.20	15
Metro 60/180	1800	600	555	1107	3777	900	**£194.40**	**£273.60**	£295.20	18

★ *All items in bold – Next working day delivery* ★*All items not in bold – 5-7 working days*

VALVES & ACCESSORIES
(Please see pages 138-148)

ADDITIONAL EXTRAS:
- *ELECTRIC VERSION (ESSENTIAL ELEMENT)* ***+ £120.00***
- *DUAL FUEL VERSION (PLEASE ADD PRICE OF CORRECT SIZE ELEMENT IN ACCESSORIES PAGE)*
- *GRIP PEG WHITE / CHROME* ***£25.20***
- *VIP HOOK WHITE / CHROME* ***£36.00***
- *TOWEL BAR TO FIT METRO 400, 500 & 600 WHITE / CHROME* ***£63.60***

AVAILABLE IN THE FOLLOWING FINISHES:

MAIN IMAGE:
Shown in Turquoise Blue RAL 5018 with Essential Corner Valves in Chrome
INSET IMAGE:
Shown in Chrome

ORION

Curved fronted ladder rail using the same construction and layout as the Metro, the Orion can be supplied in two widths and five heights.

E: *sales@dqheating.com* – ***T:*** *01842 810833*

MATERIAL
• Mild steel

DELIVERY
• All items in bold next working day

5 YEAR GUARANTEE

FOR FITTING INSTRUCTIONS VISIT
www.dqheating.com

TECHNICAL INFORMATION
STANDARD CONNECTIONS 1/2”
F = Flow **R** = Return

Wall to front face = 90-100mm
Wall to pipe centre = 67-77mm

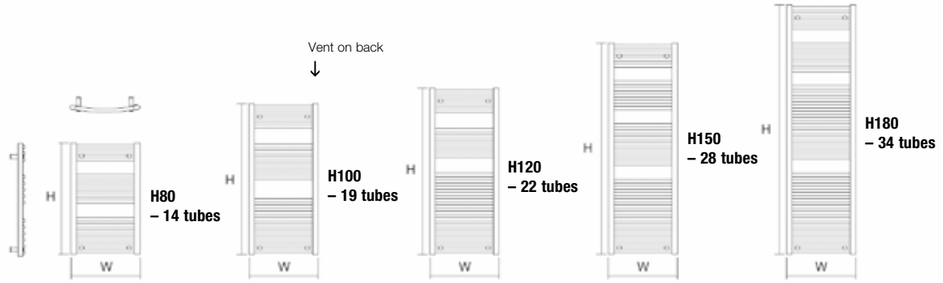

Please note: Chrome finish reduces output by up to 20%.

Model	Height (H) (mm)	Width (W) (mm)	Pipe Centres (mm)	Watts Δt 50°C	Btu's Δt 50°C	Electric Element Wattage	White (inc VAT)	Chrome (inc VAT)	RAL Colour Finishes (inc VAT)	Weight (kgs)
Orion 50/80	800	500	455	420	1433	300	**£88.80**	**£118.80**	£189.60	7
Orion 50/100	1000	500	455	538	1836	300	–	**£154.80**	–	9
Orion 50/120	1200	500	455	600	2047	600	**£120.00**	**£170.40**	£220.80	11
Orion 50/150	1500	500	455	750	2559	600	**£134.40**	**£218.40**	£235.20	13
Orion 50/180	1800	500	455	925	3156	900	**£175.20**	**£256.80**	£276.00	16
Orion 60/80	800	600	555	490	1672	300	**£98.40**	**£134.40**	£199.20	8
Orion 60/100	1000	600	555	589	2010	600	–	**£169.20**	–	10
Orion 60/120	1200	600	555	710	2423	600	**£132.00**	**£188.40**	£232.80	12
Orion 60/150	1500	600	555	900	3070	600	**£146.40**	**£246.00**	£247.20	15
Orion 60/180	1800	600	555	1107	3777	900	**£204.00**	**£286.80**	£304.80	18

★ *All items in bold – Next working day delivery* ★*All items not in bold – 5-7 working days*

VALVES & ACCESSORIES
(Please see pages 138-148)

ADDITIONAL EXTRAS:
- *ELECTRIC VERSION (ESSENTIAL ELEMENT)* ***+ £120.00***
- *DUAL FUEL VERSION (PLEASE ADD PRICE OF CORRECT SIZE ELEMENT IN ACCESSORIES PAGE)*
- *GRIP PEG WHITE / CHROME* ***£25.20***
- *VIP HOOK WHITE / CHROME* ***£36.00***
- *TOWEL BAR TO FIT ORION 500 & 600 WHITE / CHROME* ***£63.60***

AVAILABLE IN THE FOLLOWING FINISHES:

MAIN IMAGE: Shown in Infinity Steel with Jupiter Angled Valves in Brushed Nickel
INSET IMAGE: Shown in White RAL 9016

COVE TR

This sleek and stylish oval tube towel rail is available in mild steel or polished stainless steel (page 114). Both offer excellent heat outputs and exceptional value for money.

E: *sales@dqheating.com* – ***T:*** *01842 810833*

MATERIAL
• Mild steel

DELIVERY
• All items in bold next working day

5 YEAR GUARANTEE

FOR FITTING INSTRUCTIONS VISIT
www.dqheating.com

TECHNICAL INFORMATION
STANDARD CONNECTIONS 1/2”
F = Flow **R** = Return **P** = Plug **V** = Vent

Wall to front face = 90-95mm
Wall to pipe centre = 50-55mm

The Cove TR can be finished in our “Infinity Steel” PVD finish, which stands for physical vapor deposition; a process used to create a very durable, corrosion and tarnish resistant finish. PVD finish is commonly used for bathroom fixtures which are exposed to frequent moisture.

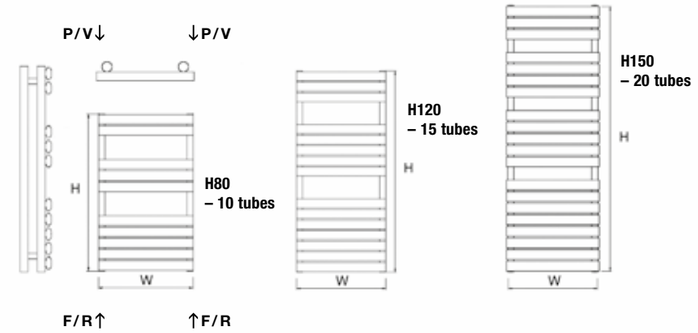

Model	Height (H) (mm)	Width (W) (mm)	Pipe Centres (mm)	Watts Δt 50°C	Btu’s Δt 50°C	Electric Element Wattage	White Anthracite (inc VAT)	RAL Colour Finishes (inc VAT)	Infinity Steel (inc VAT)	Weight (kgs)
Cove TR50/80	826	500	450	410	1399	600	**£164.40**	£265.20	**£332.40**	10
Cove TR50/120	1120	500	450	550	1877	900	**£201.60**	£302.40	**£511.20**	13
Cove TR50/150	1535	500	450	700	2388	900	**£277.20**	£378.00	**£552.00**	16

★ *All items in bold – Next working day delivery* ★*All items not in bold – 5-7 working days delivery*

VALVES & ACCESSORIES
(Please see pages 138-148)

ADDITIONAL EXTRAS:
- *ELECTRIC VERSION (ESSENTIAL ELEMENT)* ***+ £120.00***
- *DUAL FUEL VERSION (PLEASE ADD PRICE OF CORRECT SIZE ELEMENT IN ACCESSORIES PAGE)*

AVAILABLE IN THE FOLLOWING FINISHES:

MAIN AND INSET IMAGE: Shown in Brushed Brass with Essential Angled Valves in Brushed Nickel

AUSTEN

The Austen is a prestigious towel rail enhanced by its brushed brass finish, blending a clean and classic design with an exclusive feel.

E: *sales@dqheating.com* – ***T:*** *01842 810833*

MATERIAL
• Stainless steel Grade 304

DELIVERY
• All items in bold next working day

25 YEAR GUARANTEE

FOR FITTING INSTRUCTIONS VISIT
www.dqheating.com

TECHNICAL INFORMATION
STANDARD CONNECTIONS 1/2”
F = Flow **R** = Return

Wall to front face = 76-86mm
Wall to pipe centre = 65-75mm

The brackets are designed to be installed using the smallest measurement – however, the adjustment is available, where required, for fitting purposes.

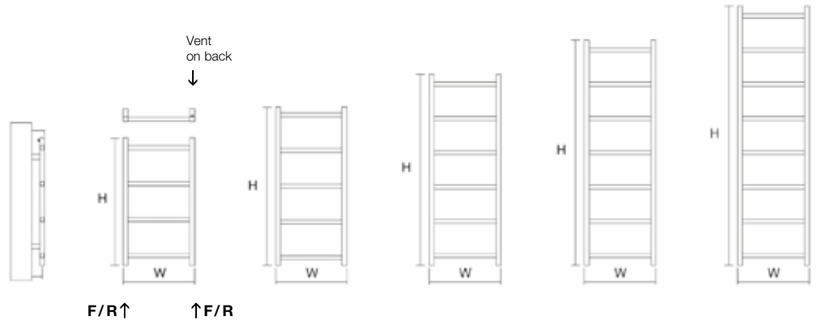

Model	Height (H) (mm)	Width (W) (mm)	Pipe Centres (mm)	Watts Δt 50°C	Btu's Δt 50°C	Electric Element Wattage	Brushed Brass (inc VAT)	Weight (kgs)
Austen 30/80	800	300	270	171	584	300	£336.00	10
Austen 30/100	1000	300	270	225	768	300	£420.00	11
Austen 30/120	1200	300	270	257	877	300	£501.60	12
Austen 45/80	800	450	420	213	727	300	**£402.00**	13
Austen 45/100	1000	450	420	274	935	300	**£504.00**	14
Austen 45/120	1200	450	420	319	1089	300	**£602.40**	15
Austen 45/150	1500	450	420	410	1399	600	**£753.60**	17
Austen 45/180	1800	450	420	480	1638	600	**£873.60**	20
Austen 60/80	800	600	570	244	833	300	£466.80	16
Austen 60/100	1000	600	570	326	1113	300	£584.40	17
Austen 60/120	1200	600	570	366	1249	300	£700.80	18

All items in bold – Next working day delivery *All items not in bold – 5-7 working days*

VALVES & ACCESSORIES
(Please see pages 138-148)

ADDITIONAL EXTRAS:
- *ELECTRIC VERSION (ESSENTIAL ELEMENT)* ***+ £120.00***
- *DUAL FUEL VERSION (PLEASE ADD PRICE OF CORRECT SIZE ELEMENT IN ACCESSORIES PAGE)*

AVAILABLE IN THE FOLLOWING FINISHES:

Brushed Brass

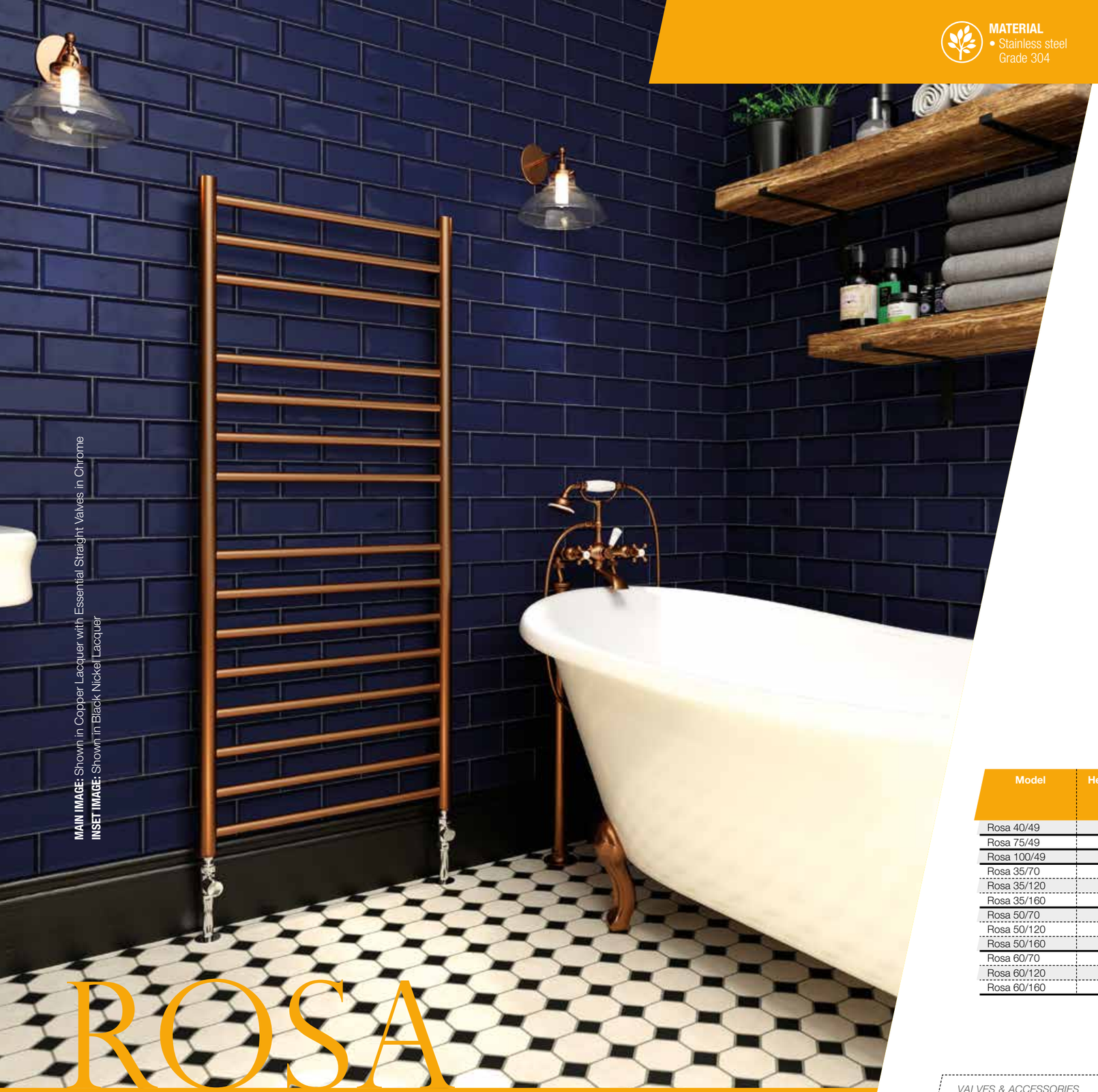

MAIN IMAGE: Shown in Copper Lacquer with Essential Straight Valves in Chrome
INSET IMAGE: Shown in Black Nickel Lacquer

ROSA

The Rosa is a quality product inspired by the latest sophisticated bathroom designs. This classic towel rail has a modern feel with its lacquered finish over polished stainless steel.

TECHNICAL INFORMATION
STANDARD CONNECTIONS 1/2”
F = Flow **R** = Return

Wall to front face = 88-100mm
Wall to pipe centre = 72-94mm

The brackets are designed to be installed using the smallest measurement – however, the adjustment is available, where required, for fitting purposes.

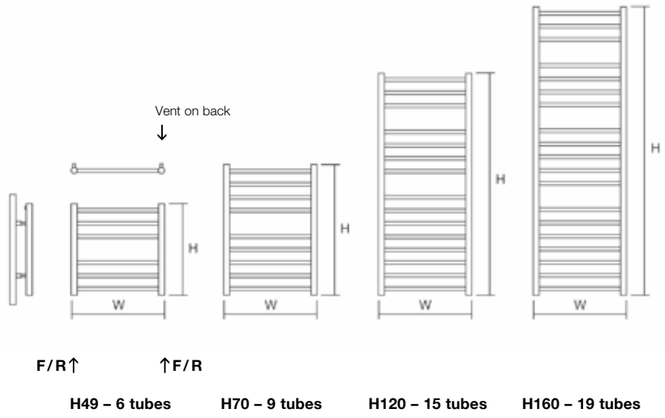

F/R↑ **↑F/R**

H49 – 6 tubes **H70 – 9 tubes** **H120 – 15 tubes** **H160 – 19 tubes**

Model	Height (H) (mm)	Width (W) (mm)	Pipe Centres (mm)	Watts Δt 50°C	Btu's Δt 50°C	Electric Element Wattage	Copper Lacquer (inc VAT)	Black Nickel Lacquer (inc VAT)	Weight (kgs)
Rosa 40/49	490	400	368	196	667	150	£231.60	£231.60	6
Rosa 75/49	490	750	718	389	1328	300	£292.80	£292.80	7
Rosa 100/49	490	1000	968	446	1523	300	£340.80	£340.80	10
Rosa 35/70	700	350	318	270	922	300	£279.60	£279.60	6
Rosa 35/120	1190	350	318	479	1636	300	£402.00	£402.00	9
Rosa 35/160	1540	350	318	563	1920	600	£481.20	£481.20	12
Rosa 50/70	700	500	468	389	1328	300	**£303.60**	**£303.60**	7
Rosa 50/120	1190	500	468	536	1827	600	**£457.20**	**£457.20**	10
Rosa 50/160	1540	500	468	713	2433	600	**£571.20**	**£571.20**	13
Rosa 60/70	700	600	568	420	1433	300	£364.80	£364.80	8
Rosa 60/120	1190	600	568	641	2187	600	£529.20	£529.20	11
Rosa 60/160	1540	600	568	754	2572	600	£663.60	£663.60	14

All items in bold – Next working day delivery *All items not in bold – 5-7 working days*

VALVES & ACCESSORIES
(Please see pages 138-148)

ADDITIONAL EXTRAS:
- *ELECTRIC VERSION (ESSENTIAL ELEMENT)* ***+ £120.00***
- *DUAL FUEL VERSION (PLEASE ADD PRICE OF CORRECT SIZE ELEMENT IN ACCESSORIES PAGE)*

AVAILABLE IN THE FOLLOWING FINISHES:

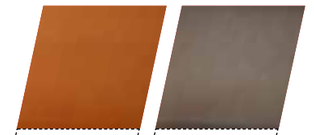

E: *sales@dqheating.com – **T:** 01842 810833*

MAIN IMAGE: Shown in Black Nickel Lacquer with Essential Angled Valves in Black Nickel
INSET IMAGE: Shown in Copper Lacquer

CAVELL

The slight bow within the Cavell's design merges perfectly with its lacquered finish. This beautiful towel rail combines style and contemporary comfort.

E: *sales@dqheating.com* – ***T:*** *01842 810833*

MATERIAL
• Stainless steel Grade 304

DELIVERY
• All items in bold next working day

25 YEAR GUARANTEE

FOR FITTING INSTRUCTIONS VISIT
www.dqheating.com

TECHNICAL INFORMATION
STANDARD CONNECTIONS 1/2"
F = Flow **R** = Return

Wall to front face = 88-100mm
Wall to pipe centre = 72-94mm

The brackets are designed to be installed using the smallest measurement – however, the adjustment is available, where required, for fitting purposes.

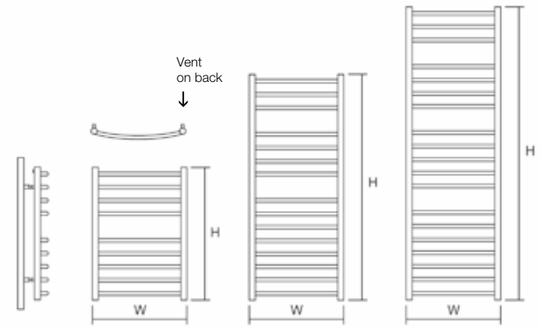

F/R↑ **↑F/R**

H70 – 9 tubes **H120 – 15 tubes** **H160 – 19 tubes**

Model	Height (H) (mm)	Width (W) (mm)	Pipe Centres (mm)	Watts Δt 50°C	Btu's Δt 50°C	Electric Element Wattage	Copper Lacquer (inc VAT)	Black Nickel Lacquer (inc VAT)	Weight (kgs)
Cavell 50/70	700	500	468	389	1328	300	**£352.80**	**£352.80**	7
Cavell 50/120	1190	500	468	536	1827	600	**£511.20**	**£511.20**	10
Cavell 50/160	1540	500	468	713	2433	600	**£639.60**	**£639.60**	13
Cavell 60/70	700	600	568	420	1433	300	£414.00	£414.00	8
Cavell 60/120	1190	600	568	641	2187	600	£612.00	£612.00	11
Cavell 60/160	1540	600	568	754	2572	600	£741.60	£741.60	14

All items in bold – Next working day delivery *All items not in bold – 5-7 working days delivery*

VALVES & ACCESSORIES
(Please see pages 138-148)

ADDITIONAL EXTRAS:
- *ELECTRIC VERSION (ESSENTIAL ELEMENT)* ***+ £120.00***
- *DUAL FUEL VERSION (PLEASE ADD PRICE OF CORRECT SIZE ELEMENT IN ACCESSORIES PAGE)*

AVAILABLE IN THE FOLLOWING FINISHES:

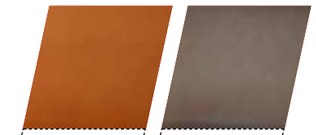

Copper Lacquer *Black Nickel Lacquer*

MAIN AND INSET IMAGE:
Shown in Polished Stainless Steel with Essential Angled Valves in Chrome

JANGO

The Jango is another exciting and innovative edition to the DQ range. The elegant contours of this towel rail give it a unique style. The high quality of the Jango is what sets it apart from similar products on the market.

E: *sales@dqheating.com – **T:** 01842 810833*

MATERIAL
• Stainless steel Grade 304

DELIVERY
• All items in bold next working day

25 YEAR GUARANTEE

FOR FITTING INSTRUCTIONS VISIT
www.dqheating.com

TECHNICAL INFORMATION
STANDARD CONNECTIONS 1/2”
F = Flow **R** = Return **P** = Plug **V** = Vent

Wall to front face = 150-185mm
Wall to pipe centre = 80-115mm

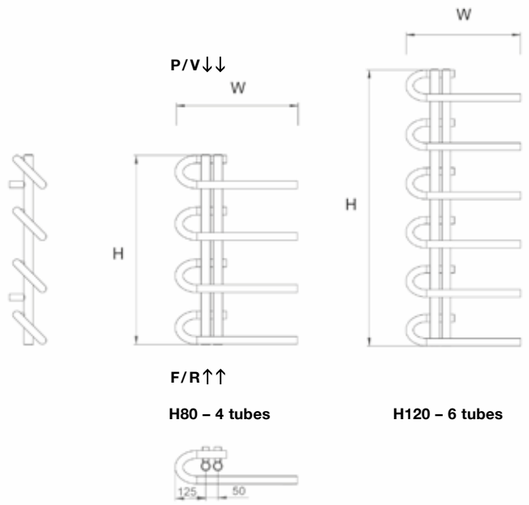

H80 – 4 tubes **H120 – 6 tubes**

Model	Height (H) (mm)	Width (W) (mm)	Pipe Centres (mm)	Watts Δt 50°C	Btu’s Δt 50°C	Polished Stainless (inc VAT)	RAL Colour Finishes (inc VAT)	Weight (kgs)
Jango 50/80	775	500	50	203	693	**£676.80**	£879.60	9
Jango 50/120	1200	500	50	301	1027	**£940.80**	£1,224.00	11

** All items in bold – Next working day delivery* ** All items not in bold – 5-7 working days delivery*

VALVES & ACCESSORIES (Please see pages 141-148)

DUAL FUEL & ELECTRIC VERSIONS NOT AVAILABLE

AVAILABLE IN THE FOLLOWING FINISHES:

Polished Stainless *RAL Colour page 149* *Finishes page 150*

MAIN AND INSET IMAGE:
Shown in Polished Stainless Steel with Essential Angled Valves in Chrome

REBO

Both its build quality and luxurious feel show the high standards to which the Rebo has been manufactured. The attention to detail on the Rebo's design is second to none, making it one of the most exciting models in the DQ range.

E: *sales@dqheating.com* – **T:** *01842 810833*

MATERIAL
• Stainless steel Grade 304

DELIVERY
• All items in bold next working day

25 YEAR GUARANTEE

FOR FITTING INSTRUCTIONS VISIT
www.dqheating.com

TECHNICAL INFORMATION
STANDARD CONNECTIONS 1/2"
F = Flow **R** = Return

Wall to front face = 90-125mm
Wall to pipe centre = 65-100mm

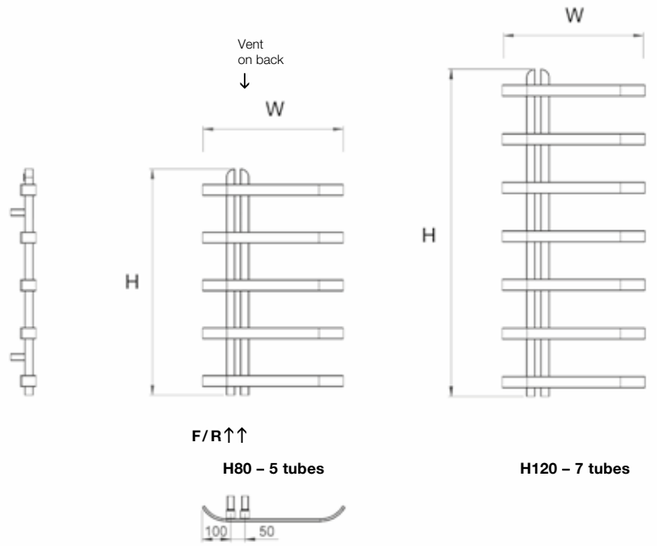

H80 – 5 tubes

H120 – 7 tubes

Model	Height (H) (mm)	Width (W) (mm)	Pipe Centres (mm)	Watts Δt 50°C	Btu's Δt 50°C	Polished Stainless (inc VAT)	RAL Colour Finishes (inc VAT)	Weight (kgs)
Rebo 50/80	805	500	50	183	624	**£630.00**	£818.40	8
Rebo 50/120	1145	500	50	231	788	**£794.40**	£1,033.20	10

All items in bold – Next working day delivery *All items not in bold – 5-7 working days delivery*

VALVES & ACCESSORIES (Please see pages 141-148)

DUAL FUEL & ELECTRIC VERSIONS NOT AVAILABLE

AVAILABLE IN THE FOLLOWING FINISHES:

Polished Stainless

RAL Colour page 149

Finishes page 150

MAIN AND INSET IMAGE:
Shown in Brushed Stainless Steel with Essential Angled Valves in Black Nickel

MAHANA

The Mahana is an exquisitely made towel rail which combines warm and natural tones of wood with a timeless brushed stainless steel finish. The fusion of materials makes the Mahana a versatile addition to enhance any space.

E: *sales@dqheating.com – **T:** 01842 810833*

MATERIAL
• Stainless steel Grade 304

DELIVERY
• Next working day

5 YEAR GUARANTEE

FOR FITTING INSTRUCTIONS VISIT
www.dqheating.com

TECHNICAL INFORMATION
STANDARD CONNECTIONS 1/2”
F = Flow **R** = Return **P** = Plug **V** = Vent

Wall to front face = 115-140mm
Wall to pipe centre = 55-80mm

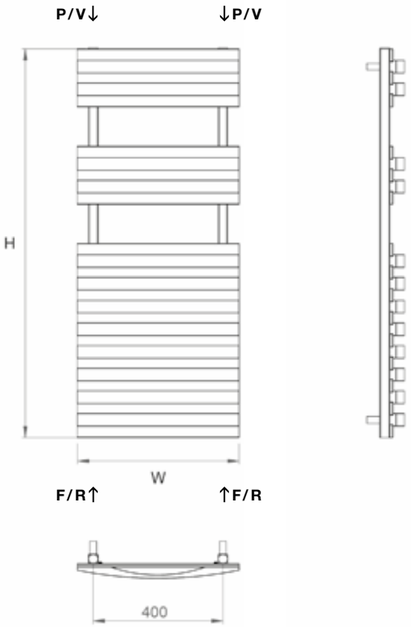

H120 – 15 tubes

Model	Height (H) (mm)	Width (W) (mm)	Pipe Centres (mm)	Watts Δt 50°C	Btu's Δt 50°C	Electric Element Wattage	Brushed & Wooden (inc VAT)	Weight (kgs)
Mahana 50/120	1200	500	400	375	1180	600	**£835.20**	12

WOOD TYPE - IROKO

* *Next working day delivery*

VALVES & ACCESSORIES
(Please see pages 138-148)

ADDITIONAL EXTRAS:
- *ELECTRIC VERSION (ESSENTIAL ELEMENT)* ***+ £120.00***
- *DUAL FUEL VERSION (PLEASE ADD PRICE OF CORRECT SIZE ELEMENT IN ACCESSORIES PAGE)*

AVAILABLE IN THE FOLLOWING FINISH:

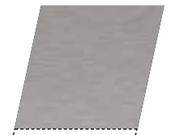

Brushed Stainless

MAIN AND INSET IMAGE:
Shown in Brushed Stainless Steel with Essential Angled Valves in Chrome

KOHA

The Koha has been classically designed with influences from nature's pure tones.
The wood finish partnered with the brushed stainless steel creates a harmonious vibe.

E: *sales@dqheating.com – **T:** 01842 810833*

MATERIAL
• Stainless steel Grade 304

DELIVERY
• Next working day

5 YEAR GUARANTEE

FOR FITTING INSTRUCTIONS VISIT
www.dqheating.com

TECHNICAL INFORMATION
STANDARD CONNECTIONS 1/2"
F = Flow **R** = Return **P** = Plug **V** = Vent

Wall to front face = 115-140mm
Wall to pipe centre = 55-80mm

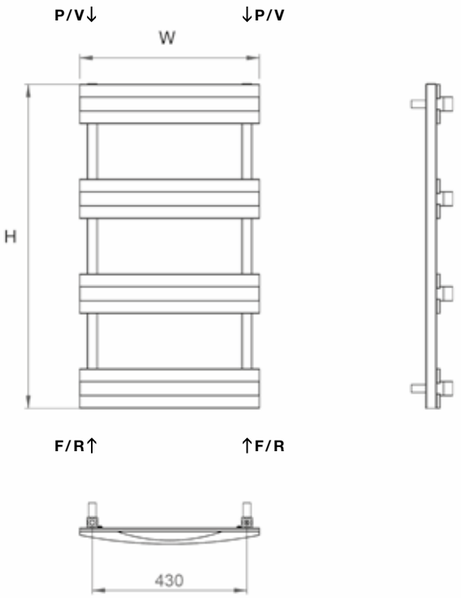

H90 – 8 tubes

Model	Height (H) (mm)	Width (W) (mm)	Pipe Centres (mm)	Watts Δt 50°C	Btu's Δt 50°C	Electric Element Wattage	Brushed & Wooden (inc VAT)	Weight (kgs)
Koha 50/90	900	500	430	245	836	300	**£588.00**	6

WOOD TYPE - IROKO

* *Next working day delivery*

VALVES & ACCESSORIES
(Please see pages 138-148)

ADDITIONAL EXTRAS:
- *ELECTRIC VERSION (ESSENTIAL ELEMENT)* ***+ £120.00***
- *DUAL FUEL VERSION (PLEASE ADD PRICE OF CORRECT SIZE ELEMENT IN ACCESSORIES PAGE)*

AVAILABLE IN THE FOLLOWING FINISH:

Brushed Stainless

MAIN AND INSET IMAGE: Shown in Polished Stainless Steel with Jupiter Angled Valves in Brushed Nickel

COVE STR

The sleek and stylish oval tubed towel rail has been manufactured from stainless steel, ensuring its durability. The Cove STR offers an excellent heat output and exceptional value for money.

E: *sales@dqheating.com – **T:** 01842 810833*

MATERIAL
• Stainless steel Grade 304

DELIVERY
• All items in bold next working day

25 YEAR GUARANTEE

FOR FITTING INSTRUCTIONS VISIT
www.dqheating.com

TECHNICAL INFORMATION
STANDARD CONNECTIONS 1/2”
F = Flow **R** = Return **P** = Plug **V** = Vent

Wall to front face = 90-95mm
Wall to pipe centre = 50-55mm

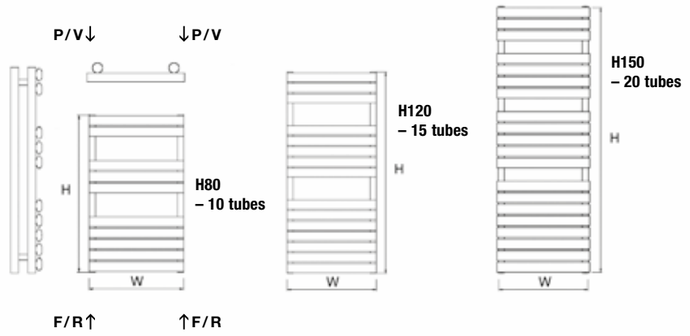

Model	Height (H) (mm)	Width (W) (mm)	Pipe Centres (mm)	Watts Δt 50°C	Btu's Δt 50°C	Electric Element Wattage	Polished Stainless (inc VAT)	RAL Colour Finishes (inc VAT)	Weight (kgs)
Cove STR50/80	826	500	450	410	1399	600	**£396.00**	£513.60	10
Cove STR50/120	1120	500	450	550	1877	900	**£492.00**	£638.40	13
Cove STR50/150	1535	500	450	700	2388	900	**£680.40**	£884.40	16

All items in bold – Next working day delivery *All items not in bold – 5-7 working days delivery*

VALVES & ACCESSORIES
(Please see pages 138-148)

ADDITIONAL EXTRAS:
- *ELECTRIC VERSION (ESSENTIAL ELEMENT)* ***+ £120.00***
- *DUAL FUEL VERSION (PLEASE ADD PRICE OF CORRECT SIZE ELEMENT IN ACCESSORIES PAGE)*

AVAILABLE IN THE FOLLOWING FINISHES:

Polished Stainless | *RAL Colour page 149* | *Finishes page 150*

MAIN IMAGE: Shown in Polished Stainless Steel with Essential Corner TRV in Chrome
INSET IMAGE: Shown in Brushed Stainless Steel

LIANA

If the Shakers had designed towel rails, they would have looked like the Liana range from DQ. The ultimate in simple design, the Liana towel rail provides the added benefit of stainless steel.

E: sales@dqheating.com – **T:** 01842 810833

MATERIAL
• Stainless steel Grade 304

DELIVERY
• All items in bold next working day

25 YEAR GUARANTEE

FOR FITTING INSTRUCTIONS VISIT
www.dqheating.com

TECHNICAL INFORMATION
STANDARD CONNECTIONS 1/2" **F** = Flow **R** = Return

Wall to front face = 76-86mm
Wall to pipe centre = 65-75mm

The brackets are designed to be installed using the smallest measurement – however, the adjustment is available, where required, for fitting purposes.

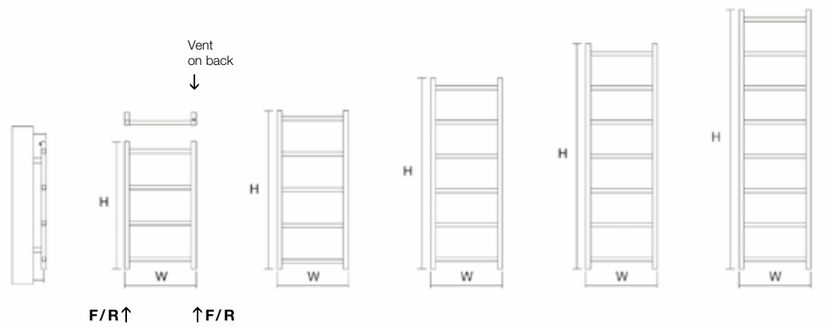

H80 – 4 tubes **H100 – 5 tubes** **H120 – 6 tubes** **H150 – 7 tubes** **H180 – 8 tubes**

Model	Height (H) (mm)	Width (W) (mm)	Pipe Centres (mm)	Watts Δt 50°C	Btu's Δt 50°C	Electric Element Wattage	Brushed Stainless (inc VAT)	Polished Stainless (inc VAT)	RAL Colour Finishes (inc VAT)	Weight (kgs)
Liana 30/80	800	300	270	171	584	300	**£246.00**	**£259.20**	£336.00	10
Liana 30/100	1000	300	270	225	768	300	**£314.40**	**£322.80**	£420.00	11
Liana 30/120	1200	300	270	257	877	300	**£369.60**	**£386.40**	£501.60	12
Liana 45/80	800	450	420	213	727	300	**£296.40**	**£309.60**	£402.00	13
Liana 45/100	1000	450	420	274	935	300	**£368.40**	**£387.60**	£504.00	14
Liana 45/120	1200	450	420	319	1089	300	**£439.20**	**£463.20**	£602.40	15
Liana 45/150	1500	450	420	410	1399	600	**£559.20**	**£579.60**	£753.60	17
Liana 45/180	1800	450	420	480	1638	600	**£638.40**	**£672.00**	£873.60	20
Liana 60/80	800	600	570	244	833	300	**£343.20**	**£360.00**	£466.80	16
Liana 60/100	1000	600	570	326	1113	300	**£429.60**	**£448.80**	£584.40	17
Liana 60/120	1200	600	570	366	1249	300	**£513.60**	**£538.80**	£700.80	18

All items in bold – Next working day delivery *All items not in bold – 5-7 working days*

VALVES & ACCESSORIES
(Please see pages 138-148)

ADDITIONAL EXTRAS:
- *ELECTRIC VERSION (ESSENTIAL ELEMENT) + **£120.00***
- *DUAL FUEL VERSION (PLEASE ADD PRICE OF CORRECT SIZE ELEMENT IN ACCESSORIES PAGE)*

AVAILABLE IN THE FOLLOWING FINISHES:

Brushed Stainless *Polished Stainless* *RAL Colour page 149* *Finishes page 150*

MAIN IMAGE: Shown in Polished Stainless Steel with Essential Straight Valves in Chrome
INSET IMAGE: Shown in Polished Stainless Steel with Contemporary Straight TRV in Chrome

SIENA

Simplicity itself... Beautifully proportioned and ultra efficient, the Siena is now available in six widths and four heights. A truly versatile towel rail in a high quality polished stainless steel finish.

E: *sales@dqheating.com* – **T:** *01842 810833*

MATERIAL
• Stainless steel Grade 304

DELIVERY
• All items in bold next working day

25 YEAR GUARANTEE

FOR FITTING INSTRUCTIONS VISIT
www.dqheating.com

TECHNICAL INFORMATION
STANDARD CONNECTIONS 1/2”
F = Flow **R** = Return

Wall to front face = 88-100mm
Wall to pipe centre = 72-94mm

The brackets are designed to be installed using the smallest measurement – however, the adjustment is available, where required, for fitting purposes.

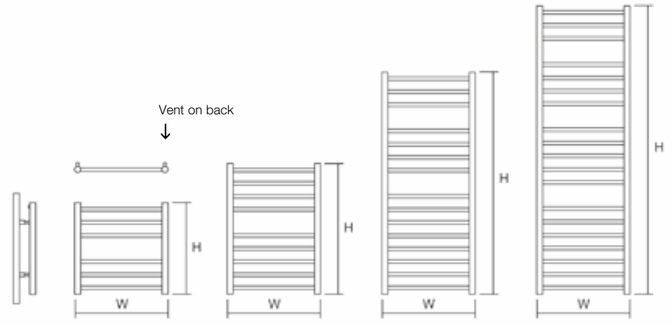

H49 – 6 tubes **H70 – 9 tubes** **H120 – 15 tubes** **H160 – 19 tubes**

Model	Height (H) (mm)	Width (W) (mm)	Pipe Centres (mm)	Watts Δt 50°C	Btu's Δt 50°C	Electric Element Wattage	Polished Stainless (inc VAT)	RAL Colour Finishes (inc VAT)	Weight (kgs)
Siena 40/49	490	400	368	196	667	150	**£159.60**	£231.60	6
Siena 75/49	490	750	718	389	1328	300	**£208.80**	£292.80	7
Siena 100/49	490	1000	968	446	1523	300	**£243.60**	£340.80	10
Siena 35/70	700	350	318	270	922	300	**£199.20**	£279.60	6
Siena 35/120	1190	350	318	479	1636	300	**£296.40**	£402.00	9
Siena 35/160	1540	350	318	563	1920	600	**£367.20**	£481.20	12
Siena 50/70	700	500	468	389	1328	300	**£230.40**	£303.60	7
Siena 50/120	1190	500	468	536	1827	600	**£344.40**	£457.20	10
Siena 50/160	1540	500	468	713	2433	600	**£428.40**	£571.20	13
Siena 60/70	700	600	568	420	1433	300	**£252.00**	£364.80	8
Siena 60/120	1190	600	568	641	2187	600	**£380.40**	£529.20	11
Siena 60/160	1540	600	568	754	2572	600	**£468.00**	£663.60	14

★ *All items in bold – Next working day delivery* ★*All items not in bold – 5-7 working days delivery*

VALVES & ACCESSORIES
(Please see pages 138-148)

ADDITIONAL EXTRAS:
- *ELECTRIC VERSION (ESSENTIAL ELEMENT)* ***+ £120.00***
- *DUAL FUEL VERSION (PLEASE ADD PRICE OF CORRECT SIZE ELEMENT IN ACCESSORIES PAGE)*

AVAILABLE IN THE FOLLOWING FINISHES:

Polished Stainless | *RAL Colour page 149* | *Finishes page 150*

MATERIAL
• Stainless steel Grade 304

DELIVERY
• All items in bold next working day

25 YEAR GUARANTEE

FOR FITTING INSTRUCTIONS VISIT
www.dqheating.com

MAIN AND INSET IMAGE:
Shown in Polished Stainless Steel with Essentail Corner TRV in Crome

ZANTE

The subtle bow front sets this bathroom radiator apart from the Siena.
Like the Siena, the Zante is a popular choice for any bathroom.

TECHNICAL INFORMATION
STANDARD CONNECTIONS 1/2”
F = Flow **R** = Return

Wall to front face = 88-100mm
Wall to pipe centre = 72-94mm

The brackets are designed to be installed using the smallest measurement – however, the adjustment is available, where required, for fitting purposes.

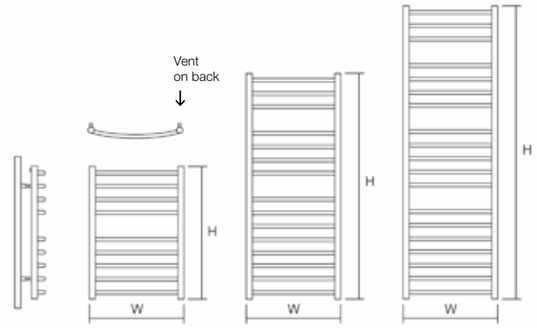

F/R↑ **↑F/R**

H70 – 9 tubes **H120 – 15 tubes** **H160 – 19 tubes**

Model	Height (H) (mm)	Width (W) (mm)	Pipe Centres (mm)	Watts Δt 50°C	Btu's Δt 50°C	Electric Element Wattage	Polished Stainless (inc VAT)	RAL Colour Finishes (inc VAT)	Weight (kgs)
Zante 50/70	700	500	468	389	1328	300	**£230.40**	£352.80	7
Zante 50/120	1190	500	468	536	1827	600	**£344.40**	£511.20	10
Zante 50/160	1540	500	468	713	2433	600	**£423.60**	£639.60	13
Zante 60/70	700	600	568	420	1433	300	**£247.20**	£414.00	8
Zante 60/120	1190	600	568	641	2187	600	**£375.60**	£612.00	11
Zante 60/160	1540	600	568	754	2572	600	**£464.40**	£741.60	14

★ All items in bold – Next working day delivery *★All items not in bold – 5-7 working days delivery*

VALVES & ACCESSORIES
(Please see pages 138-148)

ADDITIONAL EXTRAS:
- *ELECTRIC VERSION (ESSENTIAL ELEMENT)* ***+ £120.00***
- *DUAL FUEL VERSION (PLEASE ADD PRICE OF CORRECT SIZE ELEMENT IN ACCESSORIES PAGE)*

AVAILABLE IN THE FOLLOWING FINISHES:

Polished Stainless *RAL Colour page 149* *Finishes page 150*

E: *sales@dqheating.com – **T:** 01842 810833*

Twyford

Newbury

ESSENTIAL

TRADITIONAL TOWEL RAILS

Our range of imported mild steel traditional towel rails in chrome are now available for central heating, dual fuel and electric only installation. All models are in stock ensuring quick delivery and competitive prices whilst maintaining exceptional quality.

E: *sales@dqheating.com* – ***T:*** *01842 810833*

MATERIAL
• Mild steel

DELIVERY
• Next working day

5 YEAR GUARANTEE

FOR FITTING INSTRUCTIONS VISIT
www.dqheating.com

TECHNICAL INFORMATION
STANDARD CONNECTIONS 1/2”
F = Flow **R** = Return
E = Element position

Tube Diameter = 31.8mm

Showing position of electric and dual fuel element

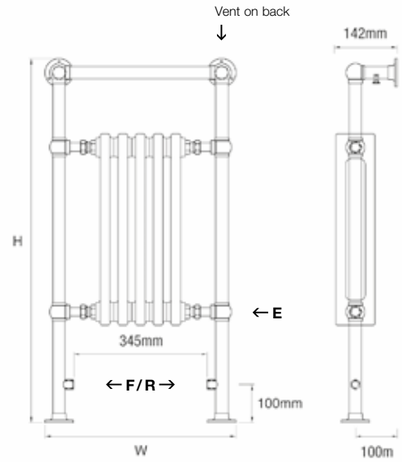

Twyford

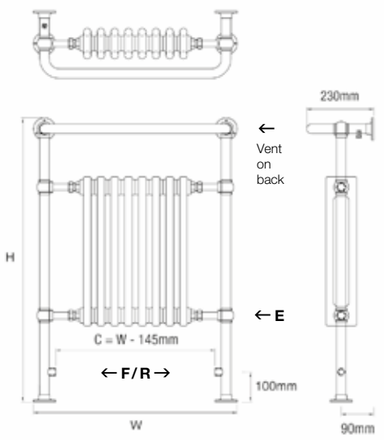

Newbury

Model	Height (H) (mm)	Width (W) (mm)	Watts Δt 50°C	Btu's Δt 50°C	Electric Element Wattage	Chrome (inc VAT)	Weight (kgs)	Column Insert (Number of Sections)
TWYFORD								
Twyford	952	500	425	1450	300	**£451.20**	15	5
NEWBURY								
Newbury-1	965	540	431	1471	300	**£409.20**	15	5
Newbury-2	965	673	610	2081	600	**£488.40**	20	8
Newbury-3	965	765	718	2450	600	**£560.40**	25	10

★ *Next working day delivery*

VALVES & ACCESSORIES
(Please see pages 138-148)

ADDITIONAL EXTRAS:
- *ELECTRIC OPTION WITH ESSENTIAL ELEMENT* ***+ £120.00***
- *DUAL FUEL OPTION WITH ESSENTIAL ELEMENT* ***+ £69.60***
- *ELECTRIC OPTION WITH MEG THERMOSTATIC ELEMENT* ***+ £222.00***
- *DUAL FUEL OPTION WITH MEG THERMOSTATIC ELEMENT* ***+ £132.00***

AVAILABLE IN THE FOLLOWING FINISH:

Column radiator inserts are White RAL 9016

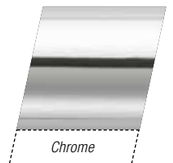

Chrome

ESSENTIAL

TRADITIONAL TOWEL RAILS

MATERIAL
• Mild steel

DELIVERY
• Next working day

5 YEAR GUARANTEE

FOR FITTING INSTRUCTIONS VISIT
www.dqheating.com

Hungerford

TECHNICAL INFORMATION
STANDARD CONNECTIONS 1/2”
F = Flow **R** = Return
E = Element position

Tube Diameter = 31.8mm

Showing position of electric and dual fuel element

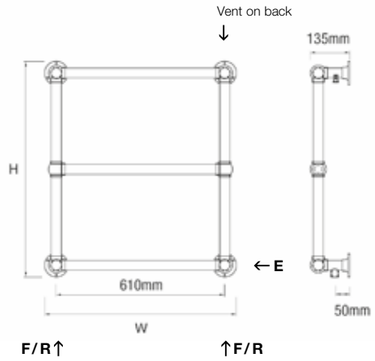

Hungerford

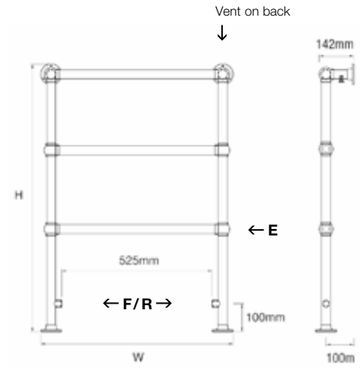

Eastbury

Model	Height (H) (mm)	Width (W) (mm)	Watts Δt 50°C	Btu's Δt 50°C	Electric Element Wattage	Chrome (inc VAT)	Weight (kgs)
HUNGERFORD							
Hungerford	685	685	137	467	150	**£280.80**	15
EASTBURY							
Eastbury	952	680	145	494	150	**£339.60**	16

★ *Next working day delivery*

VALVES & ACCESSORIES
(Please see pages 138-148)

ADDITIONAL EXTRAS:
- *ELECTRIC OPTION WITH ESSENTIAL ELEMENT* ***+ £120.00***
- *DUAL FUEL OPTION WITH ESSENTIAL ELEMENT* ***+ £69.60***
- *ELECTRIC OPTION WITH MEG THERMOSTATIC ELEMENT* ***+ £222.00***
- *DUAL FUEL OPTION WITH MEG THERMOSTATIC ELEMENT* ***+ £132.00***

AVAILABLE IN THE FOLLOWING FINISHS:

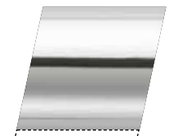

Chrome

E: *sales@dqheating.com* – ***T:*** *01842 810833*

MATERIAL • Mild steel
DELIVERY • Next working day
5 YEAR GUARANTEE
FOR FITTING INSTRUCTIONS VISIT www.dqheating.com

Lambourne

Sandhurst

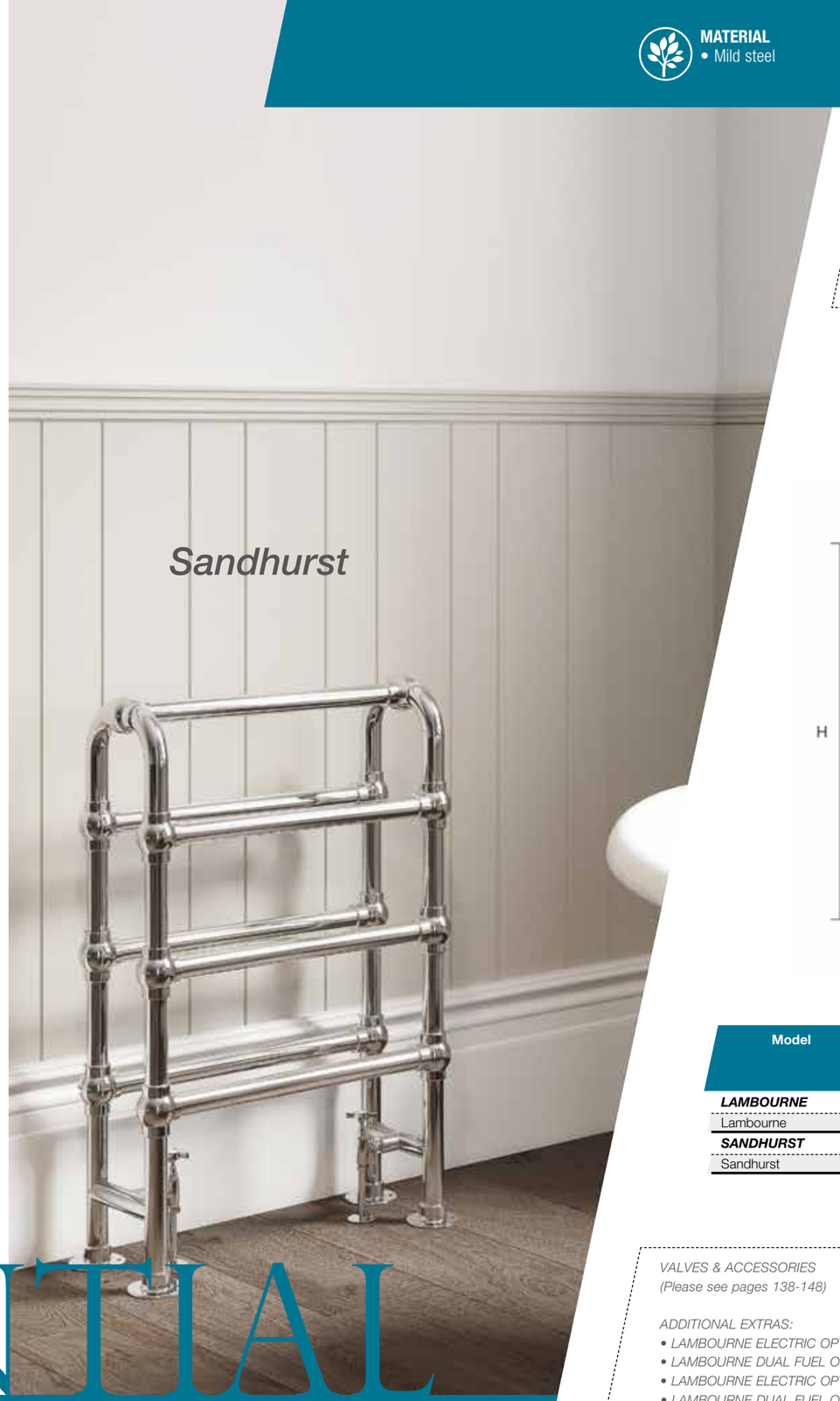

ESSENTIAL

TRADITIONAL TOWEL RAILS

TECHNICAL INFORMATION
STANDARD CONNECTIONS 1/2"

F = Flow **R** = Return
E = Element position

Tube Diameter = 31.8mm

Showing position of electric and dual fuel element

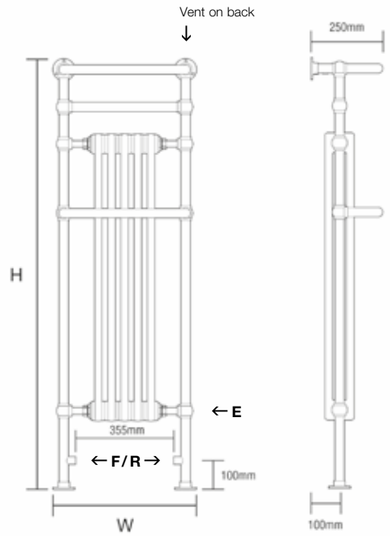

Lambourne

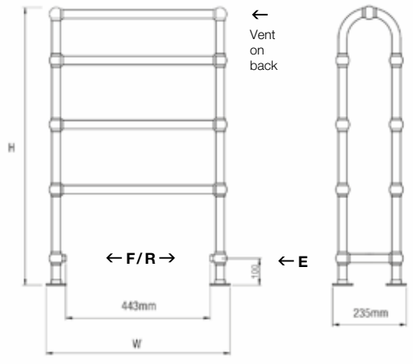

Sandhurst

Model	Height (H) (mm)	Width (W) (mm)	Watts Δt 50°C	Btu's Δt 50°C	Electric Element Wattage	Chrome (inc VAT)	Weight (kgs)	Column Insert (Number of Sections)
LAMBOURNE								
Lambourne	1500	500	896	3057	500	**£715.20**	15	5
SANDHURST								
Sandhurst	850	600	483	1648	150 x 2	**£744.00**	16	-

★ *Next working day delivery*

VALVES & ACCESSORIES
(Please see pages 138-148)

ADDITIONAL EXTRAS:

- *LAMBOURNE ELECTRIC OPTION WITH ESSENTIAL ELEMENT* ***+ £120.00***
- *LAMBOURNE DUAL FUEL OPTION WITH ESSENTIAL ELEMENT* ***+ £69.60***
- *LAMBOURNE ELECTRIC OPTION WITH MEG THERMOSTATIC ELEMENT* ***+ £222.00***
- *LAMBOURNE DUAL FUEL OPTION WITH MEG THERMOSTATIC ELEMENT* ***+ £132.00***

- *SANDHURST ELECTRIC OPTION WITH ESSENTIAL ELEMENT* ***+ £240.00***
- *SANDHURST DUAL FUEL OPTION WITH ESSENTIAL ELEMENT* ***+ £139.20***
- *SANDHURST ELECTRIC OPTION WITH MEG THERMOSTATIC ELEMENT* ***+ £444.00***
- *SANDHURST DUAL FUEL OPTION WITH MEG THERMOSTATIC ELEMENT* ***+ £264.00***

AVAILABLE IN THE FOLLOWING FINISH:

Column radiator inserts are White RAL 9016

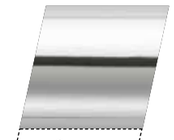

Chrome

E: *sales@dqheating.com* – **T:** *01842 810833*

LUXURY

HANDMADE TRADITIONAL TOWEL RAILS

We are able to manufacture our handmade brass traditional towel rails in any size or shape. With a large number of products and finishes available as standard, we are confident we are able to offer a solution to your heating needs. If you cannot find what you need, why not send us a sketch to allow us to manufacture a bespoke towel rail especially for you - ***E:*** *sales@dqheating.com – **T:** 01842 810833*

TECHNICAL INFORMATION
STANDARD CONNECTIONS 1/2”

F = Flow **R** = Return
E = Element position

Tube Diameter = 31.8mm

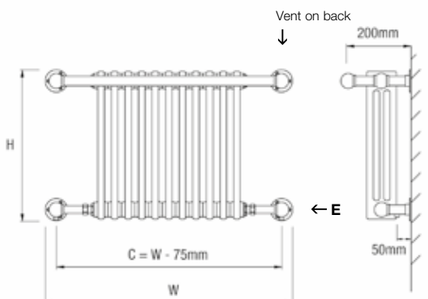

Ashill – Wall Mounted

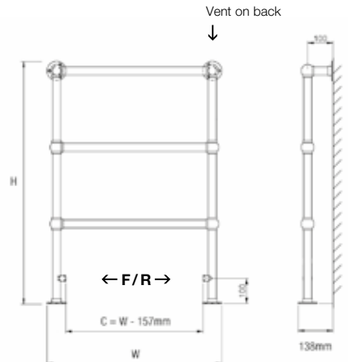

Ickburgh – Floor Mounted

Model	Height (H) (mm)	Width (W) (mm)	Watts Δt 50°C	Btu's Δt 50°C	Electric Element Wattage	Chrome (inc VAT)	Polished Nickel Brushed Nickel Polished Brass (inc VAT)	Polished Gold Antique Brass (inc VAT)
ASHILL – WALL MOUNTED								
Ashill-1 W	505	500	645	2200	300	£853.20	£1,075.20	£1,413.60
Ashill-2 W	505	685	985	3370	450	£915.60	£1,128.00	£1,485.60
Ashill-3 W	505	837	1328	4531	450	£961.20	£1,194.00	£1,536.00
ICKBURGH – FLOOR MOUNTED								
Ickburgh-1	952	500	190	653	100	£913.20	£1,194.00	£1,461.60
Ickburgh-2	952	685	231	788	100	£915.60	£1,233.60	£1,480.80
Ickburgh-3	952	837	260	887	100	£943.20	£1,272.00	£1,531.20
Ickburgh-4	952	989	289	985	150	£973.20	£1,311.60	£1,579.20

★ *4-6 weeks delivery*

VALVES & ACCESSORIES
(Please see pages 138-148)

TRADITIONAL VERSIONS:
- *ELECTRIC OPTION* ***+ £265.00***
- *DUAL FUEL OPTION* ***+ £215.00***
- *COLOURED RADIATOR INSERT* ***+ £210.00***
- *ELEMENT COVER* ***+ £176.00***

AVAILABLE IN THE FOLLOWING FINISHES:

Column radiator inserts are White RAL 9016

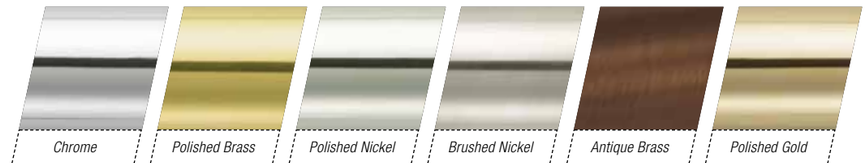

Elveden

(Image shown: Floor mounted)

Methwold

(Image shown: Floor mounted)

LUXURY

HANDMADE TRADITIONAL TOWEL RAILS

TECHNICAL INFORMATION
STANDARD CONNECTIONS 1/2"

F = Flow **R** = Return
E = Element position

Tube Diameter = 31.8mm

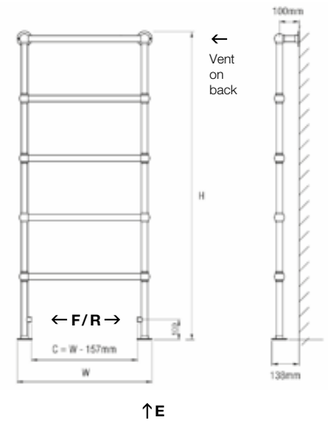

Elveden – Floor Mounted

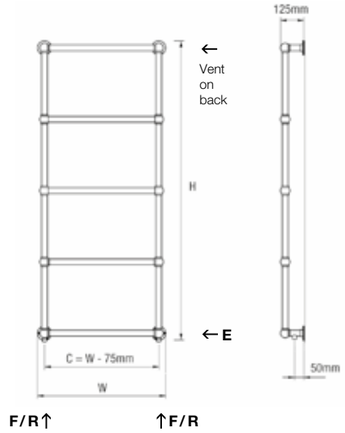

Elveden – Wall Mounted

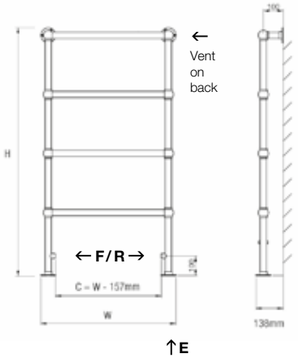

Methwold – Floor Mounted

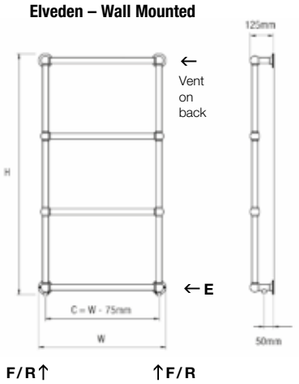

Methwold – Wall Mounted

Model	Height (H) (mm)	Width (W) (mm)	Watts Δt 50°C	Btu's Δt 50°C	Electric Element Wattage	Chrome (inc VAT)	Polished Nickel Brushed Nickel Polished Brass (inc VAT)	Polished Gold Antique Brass (inc VAT)
ELVEDEN – FLOOR MOUNTED								
Elveden-1	1562	475	252	861	100	£1,434.00	£1,923.60	£2,160.00
Elveden-2	1562	685	305	1040	150	£1,512.00	£2,042.40	£2,258.40
Elveden-3	1562	837	343	1170	150	£1,629.60	£2,150.40	£2,388.00
ELVEDEN – WALL MOUNTED								
Elveden-1 W	1599	475	308	1050	100	£1,434.00	£1,923.60	£2,160.00
Elveden-2 W	1599	685	440	1501	150	£1,512.00	£2,042.40	£2,258.40
Elveden-3 W	1599	837	510	1740	150	£1,629.60	£2,150.40	£2,388.00
METHWOLD – FLOOR MOUNTED								
Methwold-1	1257	475	244	832	100	£1,178.40	£1,591.20	£1,864.80
Methwold-2	1257	685	255	870	150	£1,276.80	£1,728.00	£1,923.60
Methwold-3	1257	837	274	936	150	£1,375.20	£1,864.80	£2,082.00
METHWOLD – WALL MOUNTED								
Methwold-1 W	1294	475	245	835	100	£1,178.40	£1,591.20	£1,864.80
Methwold-2 W	1294	685	350	1195	150	£1,276.80	£1,728.00	£1,923.60
Methwold-3 W	1294	837	385	1313	150	£1,375.20	£1,864.80	£2,082.00

★ *4-6 weeks delivery*

VALVES & ACCESSORIES
(Please see pages 138-148)

TRADITIONAL VERSIONS:
- *ELECTRIC OPTION* ***+ £265.00***
- *DUAL FUEL OPTION* ***+ £215.00***
- *ELEMENT COVER* ***+ £176.00***

E: sales@dqheating.com – **T:** 01842 810833

Croxton

***(Image shown:** Floor mounted)*

Lynford

***(Image shown:** Floor mounted)*

LUXURY

HANDMADE TRADITIONAL TOWEL RAILS

***E:** sales@dqheating.com – **T:** 01842 810833*

MATERIAL
• Brass (Mild Steel radiator inserts)

DELIVERY
• 4-6 weeks

5 YEAR GUARANTEE

FOR FITTING INSTRUCTIONS VISIT
www.dqheating.com

TECHNICAL INFORMATION
STANDARD CONNECTIONS 1/2”

F = Flow **R** = Return
E = Element position

Tube Diameter = 31.8mm

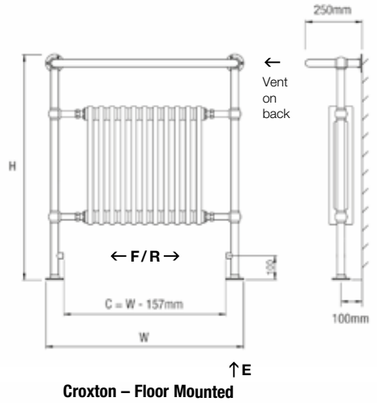

Croxton – Floor Mounted

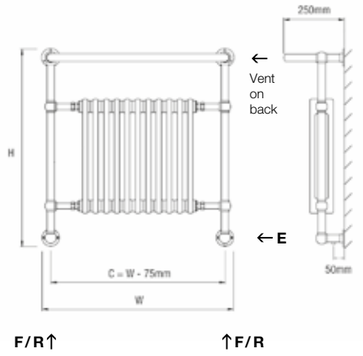

Croxton – Wall Mounted

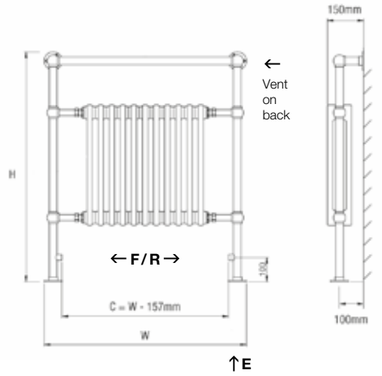

Lynford – Floor Mounted

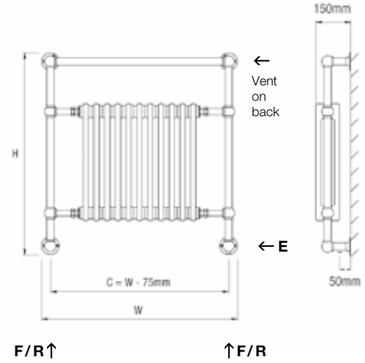

Lynford – Wall Mounted

Model	Height (H) (mm)	Width (W) (mm)	Watts Δt 50°C	Btu's Δt 50°C	Electric Element Wattage	Chrome (inc VAT)	Polished Nickel Brushed Nickel Polished Brass (inc VAT)	Polished Gold Antique Brass (inc VAT)
CROXTON – FLOOR MOUNTED								
Croxton-1	952	500	645	2200	300	£1,144.80	£1,374.00	£1,923.60
Croxton-2	952	685	985	3370	450	£1,243.20	£1,491.60	£2,038.80
Croxton-3	952	837	1328	4531	450	£1,394.40	£1,884.00	£2,184.00
Croxton-4	952	989	1666	6584	600	£1,767.60	£2,385.60	£2,454.00
CROXTON – WALL MOUNTED								
Croxton-1 W	789	500	645	2200	300	£1,144.80	£1,374.00	£1,923.60
Croxton-2 W	789	685	985	3370	450	£1,243.20	£1,491.60	£2,038.80
Croxton-3 W	789	837	1328	4531	450	£1,394.40	£1,884.00	£2,184.00
LYNFORD – FLOOR MOUNTED								
Lynford-1	952	500	645	2200	300	£1,032.00	£1,236.00	£1,520.40
Lynford-2	952	685	965	3292	450	£1,120.80	£1,365.60	£1,614.00
Lynford-3	952	837	1300	4435	450	£1,326.00	£1,789.20	£1,987.20
Lynford-4	952	989	1600	5459	600	£1,629.60	£2,200.80	£2,446.80
LYNFORD – WALL MOUNTED								
Lynford-1 W	789	500	645	2200	300	£1,032.00	£1,236.00	£1,520.40
Lynford-2 W	789	685	965	3292	450	£1,120.80	£1,365.60	£1,614.00
Lynford-3 W	789	837	1300	4435	450	£1,326.00	£1,789.20	£1,987.20

** 4-6 weeks delivery*

VALVES & ACCESSORIES
(Please see pages 138-148)

TRADITIONAL VERSIONS:
- *ELECTRIC OPTION* ***+ £265.00***
- *DUAL FUEL OPTION* ***+ £215.00***
- *COLOURED RADIATOR INSERT* ***+ £210.00***
- *ELEMENT COVER* ***+ £176.00***

Hockwold

Cranwich

LUXURY

HANDMADE TRADITIONAL TOWEL RAILS

MATERIAL
• Brass

DELIVERY
• 4-6 weeks

5 YEAR GUARANTEE

FOR FITTING INSTRUCTIONS VISIT
www.dqheating.com

TECHNICAL INFORMATION
STANDARD CONNECTIONS 1/2”
F = Flow **R** = Return
E = Element position

Tube Diameter = 31.8mm

Concealed element on dual fuel and electric floor standing towel rails.

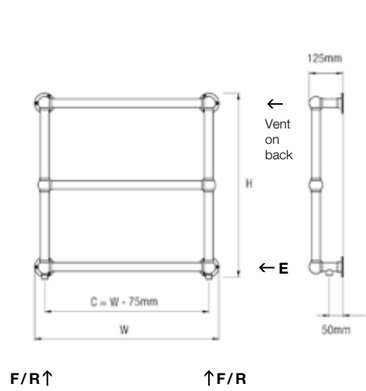

Hockwold – Wall Mounted

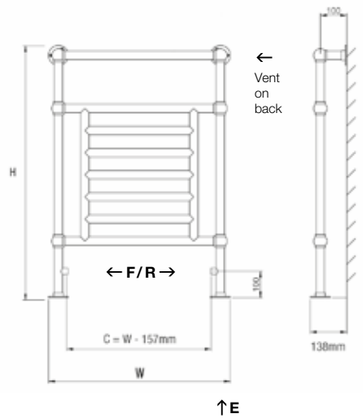

Cranwich – Floor Mounted

Model	Height (H) (mm)	Width (W) (mm)	Watts Δt 50°C	Btu's Δt 50°C	Electric Element Wattage	Chrome (inc VAT)	Polished Nickel Brushed Nickel Polished Brass (inc VAT)	Polished Gold Antique Brass (inc VAT)
HOCKWOLD – WALL MOUNTED								
Hockwold-0 W	685	475	160	545	100	£920.40	£1,194.00	£1,394.40
Hockwold-1 W	685	685	174	593	100	£949.20	£1,233.60	£1,422.00
Hockwold-2 W	685	837	195	665	150	£978.00	£1,272.00	£1,453.20
Hockwold-3 W	685	989	217	740	150	£1,008.00	£1,311.60	£1,485.60
CRANWICH – FLOOR MOUNTED								
Cranwich-1	952	685	395	1347	100	£1,029.60	£1,354.80	£1,626.00
Cranwich-2	952	837	422	1439	150	£1,140.00	£1,531.20	£1,708.80
Cranwich-3	952	989	448	1528	150	£1,276.80	£1,708.80	£1,864.80

★ *4-6 weeks delivery*

VALVES & ACCESSORIES
(Please see pages 138-148)

TRADITIONAL VERSIONS:
- *ELECTRIC OPTION* ***+ £265.00***
- *DUAL FUEL OPTION* ***+ £215.00***
- *ELEMENT COVER* ***+ £176.00***

E: *sales@dqheating.com* – ***T:*** *01842 810833*

MATERIAL
• Brass (Mild Steel radiator inserts)

DELIVERY
• 4-6 weeks

5 YEAR GUARANTEE

FOR FITTING INSTRUCTIONS VISIT
www.dqheating.com

Old Buckenham

***(Image shown:** Floor mounted)*

Hilborough

LUXURY

HANDMADE TRADITIONAL TOWEL RAILS

TECHNICAL INFORMATION
STANDARD CONNECTIONS 1/2”

F = Flow **R** = Return
E = Element position

Tube Diameter = 31.8mm

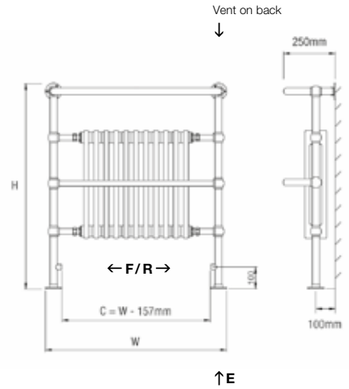

Old Buckenham – Floor Mounted

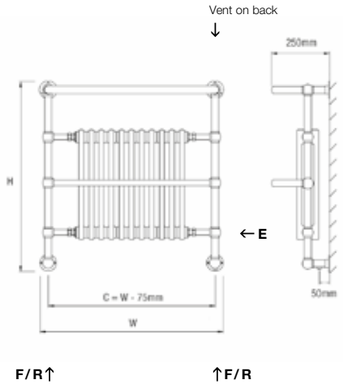

Old Buckenham – Wall Mounted

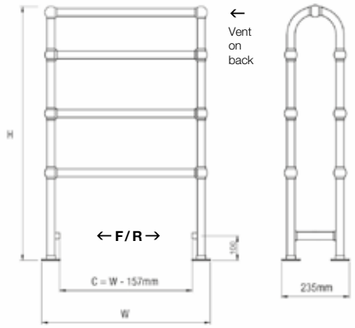

Hilborough – Floor Mounted

Model	Height (H) (mm)	Width (W) (mm)	Watts Δt 50°C	Btu's Δt 50°C	Electric Element Wattage	Chrome (inc VAT)	Polished Nickel Brushed Nickel Polished Brass (inc VAT)	Polished Gold Antique Brass (inc VAT)
OLD BUCKENHAM – FLOOR MOUNTED								
Old Buckenham-1	952	500	645	2200	300	£1,274.40	£1,604.40	£1,783.20
Old Buckenham-2	952	685	985	3370	450	£1,395.60	£1,736.40	£1,928.40
Old Buckenham-3	952	837	1328	4531	450	£1,591.20	£2,149.20	£2,388.00
Old Buckenham-4	952	989	1666	6584	600	£1,964.40	£2,650.80	£2,946.00
Old Buckenham-5	1496	500	1120	3822	450	£2,061.60	£2,784.00	£3,094.80
OLD BUCKENHAM – WALL MOUNTED								
Old Buckenham-1 W	789	500	645	2200	300	£1,188.00	£1,604.40	£1,783.20
Old Buckenham-2 W	789	685	985	3370	450	£1,286.40	£1,736.40	£1,928.40
Old Buckenham-3 W	789	837	1328	4531	450	£1,591.20	£2,149.20	£2,388.00
HILBOROUGH – FLOOR MOUNTED								
Hilborough-1	756	685	306	1044	2 x 100	£1,963.20	£2,520.00	£2,910.00
Hilborough-2	756	837	338	1153	2 x 100	£2,038.80	£2,637.60	£2,984.40
Hilborough-3	1028	685	416	1419	2 x 150	£2,290.80	£2,996.40	£3,361.20
Hilborough-4	1028	837	462	1576	2 x 150	£2,400.00	£3,127.20	£3,476.40

★ *4-6 weeks delivery*

VALVES & ACCESSORIES
(Please see pages 138-148)

TRADITIONAL VERSIONS:
- *ELECTRIC OPTION* **+ £265.00**
- *DUAL FUEL OPTION* **+ £215.00**
- *COLOURED RADIATOR INSERT* **+ £210.00**
- *ELECTRIC OPTION HILBOROUGH* **+ £530.00**
- *DUEL FUEL OPTION HILBOROUGH* **+ £430.00**
- *ELEMENT COVER* **+ £176.00**

E: *sales@dqheating.com* – ***T:*** *01842 810833*

ALL ELECTRIC & DUAL FUEL VERSIONS

ELECTRIC VERSION

To have your towel rail completely independent from your heating system, there is the electric option. The towel rail is filled with a mixture of water and glycol, before the installation of the heating element, which controls the temperature of the towel rail.

As standard, the Essential heating element is used for dual fuel and electric options. If you wish to use another element please state at time of order.

Essential elements are fitted on the right hand side as standard, all other elements are supplied separately.

All elements have a 2 year guarantee.

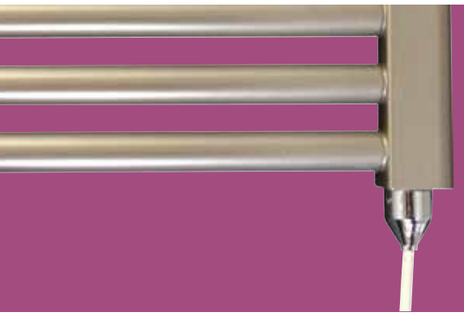

Electric only option for towel rails (Essential element) + ***£120.00*** *(inc VAT)*

If you would like your electric only towel rail supplied with an alternative element, please add the price of the required element to a reduced rate of ***£90.00****. For example: £90.00 plus the element of your choice.*

(Except traditional collection where special prices apply on these models).

DUAL FUEL VERSION *(Please add the price for the correct size element required)*

All heating elements for dual fuel are supplied with a Tee piece

DQ's high quality dual fuel kits permit the use of your towel rail all year round. The towel rail is installed as normal but with the addition of a Tee piece; this allows installation of the electrical element, which enables you to run the towel rail independently or in conjunction with your heating system.

As standard the Essential heating element is used for dual fuel and electric options, if you wish to use another element please state at time of order.

WE CAN NOW SUPPLY DUAL FUEL & MIXED SETS OF OUR CONTEMPORARY VALVES FOR DUAL FUEL APPLICATIONS.

Essential *element (IPX4 Rated)*

Model	White (inc VAT)	Chrome (inc VAT)
100W	**£69.60**	**£69.60**
150W	**£69.60**	**£69.60**
300W	**£69.60**	**£69.60**
400W	**£69.60**	**£69.60**
500W	**£69.60**	**£69.60**
600W	**£69.60**	**£69.60**
900W	**£69.60**	**£69.60**

Please note: *minimum order value for accessories is £240 – A carriage charge will apply for any orders under this amount.*

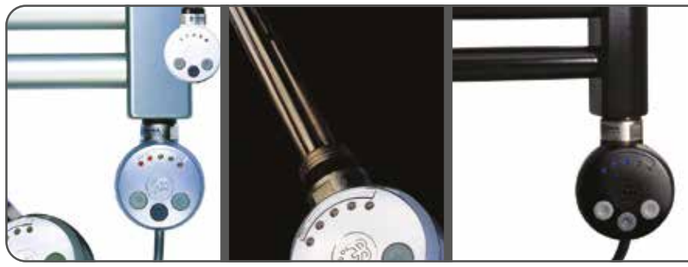

MEG *thermostatic heating element (IPX4 Rated)*
A digital thermostatic controller with 5 settings and frost protection.

ALL PRICES INCLUDE VAT

Model	White	Chrome	Silver	Matt Black
MEG 300W	**£133.20**	**£133.20**	£154.80	£154.80
MEG 600W	**£133.20**	**£133.20**	£154.80	£154.80
MEG 1000W	**£133.20**	**£133.20**	£154.80	£154.80

Infrared 7 day programmable controller for MOA IR
White ***£120.00 (inc VAT)***

MOA IR *thermostatic heating element with infrared remote control option (IPX5 Rated)*

A digital thermostatic heating element with 5 settings that can be used remotely by purchasing an infrared controller. It is fitted with a 2 hour boost button, a 'switch off' timer and frost protection.

ALL PRICES INCLUDE VAT

Model	White	Chrome	Silver	Matt Black
MOA IR 300W	**£154.80**	**£168.00**	£168.00	£168.00
MOA IR 600W	**£154.80**	**£168.00**	£168.00	£168.00
MOA IR 1000W	**£154.80**	**£168.00**	£168.00	£168.00

HGT *horizontal thermostatic heating element (IPX4 Rated)*
A horizontally mounted thermostatic element with 4 heat settings and frost protection, designed for column radiators.

ALL PRICES INCLUDE VAT

Model	White	Chrome	Satin Chrome	Anthracite	Steel	Satin Gold	Textured Light Grey	Textured Dark Grey	Matt Black
HGT 300W	**£153.40**	£159.60	£168.00	**£168.00**	£168.00	**£168.00**	£168.00	£168.00	£168.00
HGT 600W	**£159.60**	£168.00	£174.40	**£174.40**	£174.40	**£174.40**	£174.40	£174.40	£174.40
HGT 900W	**£168.00**	£174.40	£187.00	**£187.00**	£187.00	**£187.00**	£187.00	£187.00	£187.00
HGT 1200W	**£174.40**	£180.60	£187.00	**£187.00**	£187.00	**£187.00**	£187.00	£187.00	£187.00
HGT 1500W	**£180.60**	£187.00	£194.20	**£194.20**	£194.20	**£194.20**	£194.20	£194.20	£194.20
HGT 2000W	**£187.00**	£194.20	£200.60	**£200.60**	£200.60	**£200.60**	£200.60	£200.60	£200.60
	White	*Chrome*	*Satin Chrome*	*Anthracite*	*Steel*	*Satin Gold*	*Textured Light Grey*	*Textured Dark Grey*	*Matt Black*

GT *vertical thermostatic heating element (IPX4 Rated)*
An analogue thermostatic element with 4 heat settings and frost protection.

ALL PRICES INCLUDE VAT

Model	White	Chrome	Satin Chrome	Anthracite	Steel	Satin Gold	Textured Light Grey	Textured Dark Grey	Matt Black
GT 300W	**£134.40**	**£147.60**	£154.80	£154.80	£154.80	£154.80	£154.80	£154.80	£154.80
GT 600W	**£134.40**	**£147.60**	£154.80	£154.80	£154.80	£154.80	£154.80	£154.80	£154.80
GT 900W	**£134.40**	**£147.60**	£154.80	£154.80	£154.80	£154.80	£154.80	£154.80	£154.80
GT 1200W	**£154.80**	**£168.00**	£183.60	£183.60	£183.60	£183.60	£183.60	£183.60	£183.60
GT 1500W	**£154.80**	**£168.00**	£183.60	£183.60	£183.60	£183.60	£183.60	£183.60	£183.60
	White	*Chrome*	*Satin Chrome*	*Anthracite*	*Steel*	*Satin Gold*	*Textured Light Grey*	*Textured Dark Grey*	*Matt Black*

★ *All items in bold – next working day delivery* ★ *All items not in bold – 3 weeks delivery*

WI-FI HEATING ELEMENTS

Please note: *our new range of wi-fi elements are fully controllable via a downloadable app to give full functionality to enable you to program them as you wish (IPX4 rated).*

SUPLA
Android & IOS app
available to download

H+ WIFI VERTICAL THERMOSTATIC ELEMENT ***ALL PRICES INCLUDE VAT***

Model	Length (mm)	White	Chrome	Satin Chrome	Anthracite	Steel	Satin Gold	Textured Light Grey	Textured Dark Grey	Matt Black
H+ 150W	300	**£220.80**	**£220.80**	£220.80	**£220.80**	£220.80	£220.80	£220.80	£220.80	**£220.80**
H+ 300W	340	**£220.80**	**£220.80**	£220.80	**£220.80**	£220.80	£220.80	£220.80	£220.80	**£220.80**
H+ 600W	390	**£220.80**	**£220.80**	£220.80	**£220.80**	£220.80	£220.80	£220.80	£220.80	**£220.80**
H+ 900W	440	**£220.80**	**£220.80**	£220.80	**£220.80**	£220.80	£220.80	£220.80	£220.80	**£220.80**
H+ 1200W	470	**£220.80**	**£220.80**	£220.80	**£220.80**	£220.80	£220.80	£220.80	£220.80	**£220.80**
H+ 1500W	520	**£220.80**	**£220.80**	£220.80	**£220.80**	£220.80	£220.80	£220.80	£220.80	**£220.80**
H+ 2000W	570	**£220.80**	**£220.80**	£220.80	**£220.80**	£220.80	£220.80	£220.80	£220.80	**£220.80**
		White	*Chrome*	*Satin Chrome*	*Anthracite*	*Steel*	*Satin Gold*	*Textured Light Grey*	*Textured Dark Grey*	*Matt Black*

★ *All items in bold – Next working day delivery* ★ *All items not in bold – 3 weeks delivery*

SUPLA
Android & IOS app
available to download

H+H WIFI HORIZONTAL THERMOSTATIC ELEMENT ***ALL PRICES INCLUDE VAT***

Model	Length (mm)	White	Chrome	Satin Chrome	Anthracite	Steel	Satin Gold	Textured Light Grey	Textured Dark Grey	Matt Black
H+H 150W	300	**£252.00**	**£252.00**	£252.00	**£252.00**	£252.00	£252.00	£252.00	£252.00	**£252.00**
H+H 300W	340	**£252.00**	**£252.00**	£252.00	**£252.00**	£252.00	£252.00	£252.00	£252.00	**£252.00**
H+H 600W	390	**£252.00**	**£252.00**	£252.00	**£252.00**	£252.00	£252.00	£252.00	£252.00	**£252.00**
H+H 900W	440	**£252.00**	**£252.00**	£252.00	**£252.00**	£252.00	£252.00	£252.00	£252.00	**£252.00**
H+H 1200W	470	**£252.00**	**£252.00**	£252.00	**£252.00**	£252.00	£252.00	£252.00	£252.00	**£252.00**
H+H 1500W	520	**£252.00**	**£252.00**	£252.00	**£252.00**	£252.00	£252.00	£252.00	£252.00	**£252.00**
H+H 2000W	570	**£252.00**	**£252.00**	£252.00	**£252.00**	£252.00	£252.00	£252.00	£252.00	**£252.00**
		White	*Chrome*	*Satin Chrome*	*Anthracite*	*Steel*	*Satin Gold*	*Textured Light Grey*	*Textured Dark Grey*	*Matt Black*

Please note: *minimum order value for accessories is £240.00.*
A carriage charge will apply for any orders under this amount ★*Denotes finish shown*
★ *All items in bold – next working day delivery* ★ *All items not in bold – 3 weeks delivery*

ESSENTIAL RADIATOR VALVES

Please note: *our thermostatic valves are not bi-directional and must be installed on the flow connection.*

Essential Dual Fuel Valves ***Versions:*** *Dual Fuel*

Chrome ***£38.40 (inc VAT)***

PLEASE NOTE: *THESE VALVES FIT THE ESSENTIAL ELEMENT ONLY.*

Essential Square Valves ***Versions:*** *Straight & Angled*

Chrome ***£66.00 (inc VAT)***

Brushed nickel ***£82.80 (inc VAT)***

Essential TRV ***Versions:*** *Straight & Angled*

Chrome / White ***£43.20 (inc VAT)***

Chrome ***£45.60 (inc VAT)***

Brushed nickel ***£61.20 (inc VAT)***

Black nickel ***£63.60 (inc VAT)***

Essential Corner TRV ***Versions:*** *Corner Only*

Chrome / White ***£45.60 (inc VAT)***

Chrome ***£50.40 (inc VAT)***

Brushed nickel ***£67.20 (inc VAT)***

Black nickel ***£69.60 (inc VAT)***

Essential Manual Valves ***Versions:*** *Straight & Angled*

White ***£38.40 (inc VAT)***

Chrome ***£32.40 (inc VAT)***

Brushed nickel ***£50.40 (inc VAT)***

Black nickel ***£50.40 (inc VAT)***

Jet black ***£50.40 (inc VAT)***
(Angled only)

Anthracite texture ***£50.40 (inc VAT)***

Essential Corner Manual Valves ***Versions:*** *Corner Only*

Chrome ***£38.40 (inc VAT)***

Black / Brass Manual Valves ***Versions:*** *Angled Only*

Black / Brass ***£36.00 (inc VAT)***

Jupiter Manual Valves ***Versions:*** *Angled Only*

Brushed nickel ***£70.80 (inc VAT)***

★ *All items in bold – next working day delivery* ★ *All items not in bold – 3 weeks delivery*

LUXURY THERMOSTATIC RADIATOR VALVES

Please note: *our thermostatic valves are not bi-directional and must be installed on the flow connection.*

Please note: *minimum order value for accessories is £240.00.*
A carriage charge will apply for any orders under this amount ★ *Denotes finish shown*
★ *All items in bold – next working day delivery* ★ *All items not in bold – 3 weeks delivery*

Enzo Angled TRV **Versions:** Angled Only

Chrome **£114.00**
Polished brass **£114.00**
Polished nickel **£139.20**
Brushed nickel **£139.20**
Black nickel **£139.20**
Antique brass **£139.20**
Antique copper **£139.20**
★ Old English brass **£139.20**
Pewter **£139.20**
★ Brushed copper **£139.20**
Polished copper **£139.20**

All prices include VAT

Enzo Corner TRV **Versions:** Corner Only

★ Chrome **£145.20**
Polished brass **£145.20**
Polished nickel **£145.20**
Brushed nickel **£145.20**
★ Black nickel **£145.20**
Antique brass **£145.20**
Antique copper **£145.20**
Old English brass **£145.20**
Pewter **£145.20**
Brushed copper **£145.20**
Polished copper **£145.20**

All prices include VAT

Morgan TRV **Versions:** Angled Only

Brushed nickel **£154.80** ***(inc VAT)***
Antique brass **£147.60** ***(inc VAT)***
Antique copper **£154.80** ***(inc VAT)***

Stanley TRV **Versions:** Angled Only

Chrome **£109.20** ***(inc VAT)***
Polished brass **£109.20** ***(inc VAT)***
Brushed nickel **£134.40** ***(inc VAT)***
Black nickel **£134.40** ***(inc VAT)***
Antique brass **£134.40** ***(inc VAT)***
Pewter **£134.40** ***(inc VAT)***

Pluto TRV **Versions:** Straight & Angled

Chrome **£105.60** ***(inc VAT)***

Triumph TRV **Versions:** Angled Only

Chrome **£210.00**
Satin chrome **£225.60**
★ Polished brass **£210.00**
Polished nickel £238.80
Brushed nickel £238.80
Black nickel **£238.80**
Antique brass £238.80
Antique copper £238.80
Gold **£238.80**
(All prices include VAT)

Contemporary TRV **Versions:** Straight & Angled

MIXED SETS AVAILABLE FOR DUAL FUEL

(All prices shown including VAT)

White **£112.80**
Chrome **£112.80**
Satin chrome **£134.40**
Matt black **£154.80**
Polished nickel £154.80
Brushed nickel **£154.80**
Black nickel £154.80
Antique brass £154.80
★ Antique copper £154.80
Gold £154.80

Twin Star TRV **Versions:** Left / Right Hand, Straight / Angled

(All prices shown including VAT)

White **£141.60**
★ Chrome **141.60**
Satin chrome £154.80
Matt black £176.40
Brushed nickel **£176.40**
Black nickel **£176.40**
Antique brass £176.40
Antique copper £176.40
Gold £176.40

Contemporary Dual Fuel TRV **Versions:** Left & Right Hand

LEFT HAND VERSION SHOWN

ELEMENT NEEDS TO BE FITTED WITH TRV AND ON THE FLOW

White **£196.80**
Chrome **£196.80**
Satin chrome £225.60
★ Brushed nickel **£225.60**
Black nickel **£225.60**
Antique brass £238.80
Antique copper £238.80
Gold £238.80
Matt black £238.80
(All prices shown including VAT)

Saturn Corner TRV **Versions:** Left & Right Hand

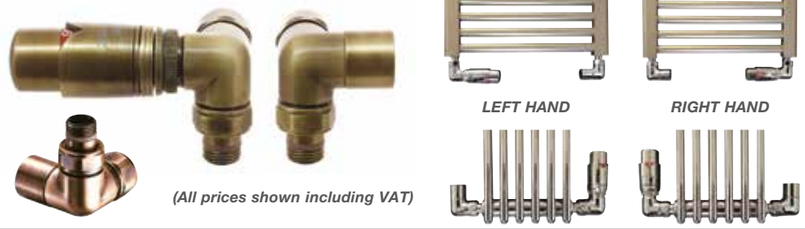

(All prices shown including VAT)

LEFT HAND ***RIGHT HAND***

White **£183.60**
Chrome **£183.60**
Satin chrome **£225.60**
Matt black £231.60
Polished nickel £231.60
Brushed nickel £231.60
Black nickel £231.60
★ Antique brass £231.60
★ Antique copper £231.60
Gold £231.60

LUXURY MANUAL RADIATOR VALVES

Please note: *minimum order value for accessories is £240.*
A carriage charge will apply for any orders under this amount ★ *Denotes finish shown*
★ *All items in bold – next working day delivery* ★ *All items not in bold – 3 weeks delivery*

Enzo Angled Manual Valves **Versions:** Angled Only

Chrome **£114.00**
★ Polished brass **£114.00**
Polished nickel **£114.00**
Brushed nickel **£114.00**
Black nickel **£114.00**
Antique brass **£114.00**
Antique copper **£114.00**
Old English brass **£114.00**
★ Pewter **£114.00**
Brushed copper **£114.00**
Polished copper **£114.00**

All prices include VAT

Enzo Corner Manual Valves **Versions:** Corner Only

Chrome **£126.00**
Polished brass **£126.00**
Polished nickel **£126.00**
★ Brushed nickel **£126.00**
Black nickel **£126.00**
★ Antique brass **£126.00**
Antique copper **£126.00**
Old English brass **£126.00**
Pewter **£126.00**
Brushed copper **£126.00**
Polished copper **£126.00**

All prices include VAT

Abbey Manual Valves **Versions:** Angled Only

Brushed nickel **£162.00** ***(inc VAT)***
★ Antique brass **£154.80** ***(inc VAT)***
Antique copper **£162.00** ***(inc VAT)***

Contemporary Dual Fuel Manual Valves **Versions:** Left & Right Hand

LEFT HAND VERSION SHOWN

★ White **£141.60**
Chrome **£141.60**
RAL colours £168.00
Satin chrome £168.00
Brushed nickel **£168.00**
Black nickel £168.00
Antique brass £183.60
Antique copper £183.60
Gold £183.60
(All prices shown including VAT)

Contemporary Manual Valves **Versions:** Straight & Angled

MIXED SETS AVAILABLE FOR DUAL FUEL

White **£70.80**
Matt black **£70.80**
RAL colours £70.80
★ Chrome **£70.80**
★ Satin chrome £92.40
Polished nickel **£92.40**
Brushed nickel **£92.40**
Black nickel **£92.40**
Antique brass £92.40
Antique copper £92.40
Gold **£92.40**

(All prices shown including VAT)

Saturn Corner Manual Valves **Versions:** Corner Only

White **£141.60**
Chrome **£141.60**
Satin chrome **£162.00**
RAL colours £163.20
Brushed nickel **£176.40**
Black nickel **£176.40**
★ Antique brass £176.40
Antique copper £176.40
Gold **£176.40**
(All prices shown including VAT)

Twin Star Manual Valves **Versions:** Straight & Angled

50MM CENTRES

White **£92.40**
★ Chrome **£92.40**
Satin chrome £98.40
RAL colours £105.60
Brushed nickel **£105.60**
Black nickel £105.60
Antique brass £105.60
Antique copper £105.60
Gold £105.60
(All prices shown including VAT)

Cross Head Manual Valves **Versions:** Straight & Angled

★ Chrome **£69.60**
Satin chrome **£76.80**
Polished nickel **£92.40**
Brushed nickel **£92.40**
Black nickel **£92.40**
Antique brass £92.40
Antique copper £92.40
★ Gold **£92.40**

(All prices shown including VAT)

Aston Manual Valves **Versions:** Angled Only

★ Brass **£50.40**
★ Polished nickel **£50.40**
Brushed nickel **£50.40**

3/4" version available in Brass & Chrome **£92.40**

(All prices shown including VAT)

ADDITIONAL ITEMS

Please note: *minimum order value for accessories is £240.00.*
A carriage charge will apply for any orders under this amount
★ *All items in bold – next working day delivery*

130mm Sleeving Kits

Chrome **£30.00**

Polished brass **£36.00**

Polished nickel **£36.00**

Brushed nickel **£36.00**

Black nickel **£36.00**

Antique brass **£36.00**

Antique copper **£36.00**

Pewter **£36.00**

Old English brass **£36.00**

Brushed copper **£36.00**

Polished copper **£36.00**

All prices include VAT

300mm Sleeving Kits

Chrome
£42.00 (inc VAT)

Brushed nickel **£49.20 (inc VAT)**

Black nickel **£49.20 (inc VAT)**

Tee Piece

Chrome **£13.20 (inc VAT)**

Flat Air Vent & Plug

Chrome **£15.60 (inc VAT)**

Aladdin Autovent

Polished nickel
£27.60 (inc VAT)

Bush

3/4in BSPT x 1/2in BSPP M / F Bush
Brass **£15.60 (inc VAT)**
Chrome **£10.80 (inc VAT)**

Electric Control

Electric Element Thermostatic Control Unit (Max power output 800W)
White **£98.40 (inc VAT)**
Chrome **£106.80 (inc VAT)**

Reducer

15mm x 10mm Micro-bore Reducer
White **£7.20 (inc VAT)**
15mm x 8mm Micro-bore Reducer
White **£7.20 (inc VAT)**

Standard Wall Stay

250mm long
Chrome **£15.60 (inc VAT)**

Luxury Wall Stay 265mm long

Chrome
£42.00

Polished brass **£42.00**

Polished nickel **£42.00**

Brushed nickel **£42.00**

Black nickel **£42.00**

Antique brass **£42.00**

Antique copper **£42.00**

Pewter
£42.00

Old English brass **£42.00**

Brushed copper **£42.00**

Polished copper **£42.00**

All prices include VAT

Please note: *minimum order value for accessories is £240.00.*
A carriage charge will apply for any orders under this amount. All items in bold – next working day delivery

Radiator Valve Extension

Rigid
15mm ***£13.20*** */ 20mm* ***£13.20***
30mm ***£13.20*** */ 40mm* ***£13.20***
50mm ***£13.20***
(inc VAT)

Telescopic
20-50mm ***£21.60***
20-70mm ***£21.60***
(inc VAT)

Towel Hanging Options

Vela TB
367mm / 488mm
Polished aluminium
£139.20 (inc VAT)

Cassius TB
200mm / 340mm / 480mm
White / Chrome / Anthracite
£61.20
(inc VAT)

Cove TB
295mm / 413mm
White / Chrome ***£63.60***
(inc VAT)

Modus TB
322mm
(to fit 9 sections and above)
White / Chrome ***£133.20***
(inc VAT)

Metro, Orion TB
400mm / 500mm / 600mm
White / Chrome ***£63.60***
(inc VAT)

Delta TB
230mm Brushed ***£58.80***
230mm Polished ***£72.00***
410mm Brushed ***£79.20***
410mm Polished ***£100.80***
(inc VAT)

Grip Peg
White / Chrome
£25.20 (inc VAT)

VIP Hook
White / Chrome
£36.00 (inc VAT)

Fender shelf
Beech ***£109.20***
Oak ***£109.20***
Teak ***£267.60***
(inc VAT)

Oakham shelf
Beech ***£78.00***
Oak ***£78.00***
Teak ***£159.60***
(inc VAT)

RAL COLOURS

All colours shown are a gloss finish. We have over 300 colours available from stock, if the RAL colour you require is not included in this colour chart or you require a matt finish, please contact our sales office for availability.
Please note: *lead times for special orders may be extended during our busiest periods.*

1000 Green Beige | *1001 Pale Beige* | *1013 Pearl White* | *1015 Light Ivory*

1021 Cadmium Yellow | *1023 Traffic Yellow* | *1036 Pearl Gold* | *2003 Pastel Orange*

2004 Pure Orange | *2008 Light Red Orange* | *3000 Flame Red* | *3001 Signal Red*

3002 Carmine Red | *3003 Ruby Red* | *3004 Purple Red* | *3005 Wine Red*

5001 Green Blue | *5002 Ultramarine Blue* | *5003 Dark Sapphire Blue* | *5005 Signal Blue*

5010 Gentian Blue | *5015 Middle Sky Blue* | *6005 Light Moss Green* | *6009 Fir Green*

6029 Mint Green | *7015 Slate Grey* | *7016 Anthracite Grey* | *7030 Stone Grey*

7032 Grey | *7035 Pale Grey* | *7040 Window Grey* | *7042 Traffic Grey A*

8003 Clay Brown | *8017 Chocolate Brown* | *8019 Grey Brown* | *9001 Cream*

9002 Grey White | *9003 Signal White* | *9005 Jet Black* | *9006 White Aluminium*

9007 Grey Aluminium | *9010 Pure White* | *9016 Traffic White* | ***MATT RAL*** *We can offer matt RAL finishes in any colour*

Please note: *for technical reasons paint colours may not match exactly to the samples above and should be used for illustrative purpose only.*

FINISHES

SPECIAL FINISHING

F06 *Metal Rough Black / Black Metal*

F15 *Metal Sparkling Black*

F04 *Dark Grey Texture*

F03 *Metal Anthracite*

F07 *Silver Effect*

F20 *Milky*

F14 *Old Bronze effect / Dark Bronze*

F23 *Twilight*

F24 *Blue Chill*

F25 *Sandstone*

F26 *Rose Gold*

F27 *Bronze*

F28 *Copper*

F29 *Black Sparkle*

F30 *Matt Black*

F31 *Gun Metal*

F32 *Sable*

F33 *Platinum 7048*

F34 *White Frost*

MELANGE

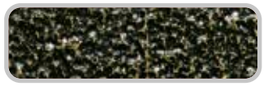

M01 *Historic Gold*

M02 *Historic Copper*

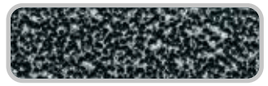

M04 *Historic Silver*

WAVY

W01 *Night*

W02 *Carbon*

W03 *Smoke*

W04 *Snowflake*

FINE TEXTURE

FT 1013 *Beige*

FT 9016 *White*

FT 7016 *Anthracite*

MODUS LACQUERED RANGE

Bare Metal Lacquer

Copper Lacquer

Black Nickel Lacquer

Brass Lacquer

Please note: *the Modus Lacquered range has been created to enhance the marking of the manufacturing process, this creates personal markings to each section.*

Please note: *for technical reasons paint colours may not match exactly to the samples above and should be used for illustrative purposes only.*

DQ CAST IRON FINISHES

STANDARD FINISHES

9010 *Pure White*

9001 *Edwardian Cream*

Hammered Bronze

Victorian Foundry Grey

7016 *Anthracite Grey*

9011 *Graphite Black*

LACQUERED HIGHLIGHTS / SATIN POLISHED

Lacquered Highlight Polished

Lacquered Satin Polished

PREMIUM FINISHES

Black Nickel

Brass

Copper

Gold

Polished

Rose Gold

Please note: *all lacquered & premium finishes are only polished on one side as standard.*

Casting is not an exact science and during the manufacturing process slight variations and imperfections can occur. In the case of radiators, the manufacturing process can leave some of the edges feeling rough. It is quite often this rough texture and appearance that makes the cast iron radiator such a period feature.

Please note: *for technical reasons paint colours may not match exactly to the samples above and should be used for illustrative purposes only.*

Interpretation
These Terms and Conditions apply to Double Quick (Heating) Ltd (company number 3853486) whose principal place of business is at Units 3 & 4, St Helens House, St Helens Way, Thetford, Norfolk IP24 1HG;
"Goods" means the goods which we supply in accordance with these Conditions;
"Stock Item" shall mean those goods which are part of our normal and/or standard range;
"Special Items" shall mean those products which are not Stock Items.
We reserve the right to amend these conditions from time to time.
Each separate order will be viewed as a new 'contract', and you will be subject to the terms in force at the time of placing the order.

Basis of Sale
These Conditions shall apply to all sales by us, and any variation to these conditions shall have no effect unless expressly agreed in writing between us and yourselves.
Any typographical, clerical or other error or omission in any sales literature, quotation, price list, acceptance of offer, invoice or other document or information, issued by us shall be subject to correction without any liability on our behalf.
For the avoidance of doubt, this contract does not transfer any intellectual Property Rights owned by us to you.
All orders are subject to acceptance and availability. If the goods you have ordered are not available from stock or are not standard stock items, we will contact you to arrange a suitable delivery time.

Orders and Specifications
You shall be responsible for ensuring the accuracy of the terms of any order (including any applicable specification) submitted by you, giving us any necessary information relating to the goods within a sufficient time to enable us to deliver the order in accordance with its terms.
The quantity and description of and any specifications for the goods shall be those set out in our quotation or confirmation of your order.
All technical data, measurements and outputs are in accordance with the manufacturer's terms of reference at the time of going to press. Each manufacturer reserves their rights to change, alter or discontinue products (including brackets and fixtures) as illustrated within our catalogue. You are advised to confirm at the time of ordering that the published technical data in our brochure and the enclosed price list is still valid. Please note that white radiators ordered from different colour codes may vary slightly due to manufacturing tolerances. It should also be noted that some colours may also vary slightly from colour chips or RAL charts provided.

Cancellation or Variation of Orders
Whether the goods are Stock Items or Special Items shall be solely determined by us.
No cancellation or alteration to orders for Stock Items will be accepted after the date of the order being placed and accepted without written agreement. Thereafter any such cancellation or change will be accepted at our discretion. Where cancellation or alteration of orders is accepted by us, you may be required to pay a restocking charge, to cover administrative costs and collection costs (if applicable); such charges to be determined by us.
You have no right to cancel or change any order for Special or non stock items, after the date of the order being accepted. In the event of such cancellations being accepted, there may be a re-stocking charge of up to 50% to cover our expenses.
We reserve the right to suspend or cancel an order, by written notice if: you fail to pay us any money when due (under the order or otherwise); you become insolvent; you fail to honour your obligations under these terms.

Prices
The price of the goods shall be our quoted price or, where no price has been quoted, the price listed in our published price list current at the date of acceptance of the order, minus the requisite discount terms.
The price is inclusive of any applicable Value Added Tax which shall be payable in addition by you at the rate prevailing at the time of payment.
We reserve the right, by giving notice to you at any time before delivery, to increase the price of the goods to reflect any increase in the cost to you.
While we try to ensure that all prices quoted are accurate, errors may occur. Wherever it is not possible to accept your order to buy goods of the specification and description at the price indicated, we will advise you by email / phone and give you the option of purchasing the goods at the correct price stated or cancelling the order.

Terms of Payment
Except where expressly agreed in writing you will be required to pay 100% of the price of the goods minus the agreed discount.
In default of payment by you, we shall be at liberty to suspend further deliveries until payment is made.
We reserve the right to withdraw or reduce any credit facilities which may have previously been available to you.
No payment shall be deemed to have been received until we have received cleared funds.
If you have an approved credit account, payment is due no later than 30 days following the end of the month in which the goods are delivered, unless otherwise agreed in writing.
You can request a pro-forma invoice to make payment. Please call our sales department for further details.
We reserve the right to place an account on hold due to non payments, or to move account holders onto pro-forma terms.

Delivery
Whilst every effort is made to deliver goods on the dates or within the periods mentioned on the order, such dates or periods shall be deemed to be an estimate only and we accept no liability whatsoever for any loss or damage of any nature which may be suffered by your selves as a result of any failure on our behalf to deliver goods on or within the times, dates or periods mentioned in the order.
The goods may be delivered by us in advance of the quoted delivery date upon giving reasonable notice to you.
Where goods are to be delivered in instalments, each delivery may constitute a separate order and failure by us to deliver any one or more of the instalments in accordance with these Conditions, or any claim by you in respect of any one or more of the instalments, shall not entitle you to treat the order as a whole as cancelled.
Each instalment may be treated as a separate order and we may charge delivery accordingly.
We shall not be liable for any non-delivery of goods (even if caused by our negligence) unless you give written notice to us of the non-delivery within 3 days of the date when the goods would in the ordinary course of events have been received. Any liability by us for non-delivery of the goods shall be limited to replacing the goods within a reasonable time or issuing a credit note against any invoice raised for such goods.
If for any reason you fail to accept delivery of any of the goods, or we are unable to deliver the goods on time because you have not provided appropriate instructions, documents, licences or authorisations:
The risk in the goods shall pass to you (including for loss or damage);
The goods shall be deemed to have been delivered; and
We may store the goods until delivery, whereupon you shall be liable for all related costs and expenses (including, without limitation, storage and insurance).
Delivery will take place to the delivery address as specified by you at the time of order, unless otherwise expressly agreed in writing.
Our delivery agent or designated delivery company shall not deliver beyond the nearest accessible external hard standing area.
If the delivery agent enters the recipient's property to deliver whether or not at your request, then this constitutes a separate arrangement between the recipient and the deliverer, and we shall not be party to any such arrangement. In these circumstances we shall not be liable for any loss, damage or other liability whatsoever or howsoever suffered or incurred as a direct or indirect result of the relevant delivery company entering property.
A charge will only be made for delivery in accordance with our current price list, unless otherwise agreed by us and you, for accessories with a total list price of below £250.
The receiver must sign for delivery, and once such proof of delivery is so signed, the goods will be deemed to have been accepted by or on behalf of your selves. It shall be the recipient's responsibility to check, before signing for delivery, that the correct quantity of goods has been delivered and that the packaging has not been damaged. Qualifications in signature relating to the lack of examination ("unexamined" etc) cannot be accepted by us in the event of subsequent claims being made.
You must immediately inspect the goods and notify us of any damage to the goods within 3 days of delivery. We shall have no obligation to replace or repair damaged goods in the event of failure by the Buyer to comply with this provision.
We will accept no responsibility in respect of goods claimed to have been lost or damaged in transit where delivery is otherwise than by us.
In the case of goods being sent by post, we will accept no responsibility in respect of goods claimed to have been lost or damaged unless a written complaint is received by both the Post Office and us within 7 days of the date of dispatch.
Please note that many of our European Suppliers shut down during the summer and Christmas periods for 4 & 2 weeks respectively. This can add to prospective delivery times, especially for non-stock items, and is out of our control.
We may decline to deliver if: we believe that it would be unsafe, unlawful or unreasonably difficult to do so; or the premises (or the access to them) are unsuitable for our vehicle or delivery agent.
For deliveries to the Isle of Wight, the Isle of Man, the Scottish Isles, parts of Scotland, Northern Ireland and the Channel Isles you may be required to pay extra for delivery.
Property Ownership and Risk
The risk in the goods shall pass to you upon delivery. Full ownership will be transferred once payment is received.

Returns
Damaged goods being returned will only be collected from your delivery address, unless otherwise agreed in writing. Any other goods, which we accept back, are to be returned by you to our place of business at your expense.
Items will be accepted as a return which have not been installed or damaged after delivery.
Goods should be returned in their original packaging, provided such packaging and goods are undamaged.
We may issue a credit note for goods which we accept as returned.
We may agree to provide you with replacement goods prior to collecting or receiving back the goods to be returned (whether faulty, damaged or otherwise) but only on the condition that: the replacement goods are paid for in full and we reserve the right to re-invoice you in the event that the returned goods are found to be in a worse condition than when they were originally received by you or where such goods have not been received back to us within 3 months of the replacement goods being received by yourselves.
A re-stocking charge of 30% will be applied to all non-faulty stock items that wish to be returned. Special order and non-stock products cannot be cancelled. Where cancellation or alteration of orders is accepted by us, you may be required to pay a restocking charge, to cover administrative costs and collection costs (if applicable); such charges to be determined by us.
If the goods we deliver are faulty or damaged, we will meet the cost of the return, as long as the fault is reported to us within 3 working days.

Installation
The goods will be deemed to have been accepted when they have been delivered and we may not accept claims for any visible defects found after installation.
We accept no liability for any cost incurred relating to the cost of installation.
We shall not be liable for any plumber's costs, decorator's costs, transport costs, late penalties, or any other costs, as a direct or indirect result of (i) any defect in the goods (including but not limited to any manufacturing faults, such as leaks, that become apparent on or after installation) or (ii) late delivery of the goods.
YOU ARE ADVISED NOT TO BOOK AN INSTALLER OR CONTRACTOR UNTIL YOUR GOODS HAVE ARRIVED AND HAVE BEEN CHECKED.
Please do not install any goods that appear damaged.

Insolvency of the buyer
If you make any voluntary arrangement with your creditors or become subject to an administration order or become bankrupt or go into or an administrator takes possession, or a receiver is appointed to any of your properties or assets, or you cease, or threaten to cease trading, or we reasonably believe that any of these events is about to take place, we shall be entitled to cancel or suspend any further deliveries to you.

Warranties
We warrant that the goods will correspond with their specification at the time of delivery and will be free from defects in detail and workmanship either at the time of.
No liability will be accepted for minor variations between the colour chart and/or colour samples and the actual finish of the goods;
We shall be under no liability in respect of any defect in the goods arising from any drawing design or specification supplied to us.
We shall be under no liability in respect of any defect arising from fair wear and tear, wilful damage, negligence, abnormal working condition, failure to follow the installation instructions (whether oral or written), misuse or alteration or repair of the goods.

Notices
Unless otherwise expressly stated in these terms and conditions, all notices from you to us must be in writing, fax, or email and sent to our contact address given above and all notices from us to will be in writing, fax or e-mail.

Changes to legal notices
We reserve the right to change these terms and conditions from time to time.

Law, jurisdiction and language
The conditions therein and any contract brought into being as a result of usage of our brochure / website are governed by and construed in accordance with English law.
Parties to any such contract agree to submit to the exclusive jurisdiction of the courts of England and Wales. All contracts are concluded in English.

Back cover image:
Orion shown in Turquoise Blue RAL 5018 with Essential Corner Valves in Chrome

Inside back cover image:
Modus Lacquered Range shown in Black Nickel Lacquer with Enzo Angled TRV in Black Nickel

DQ HEATING

Double Quick (Heating) Ltd

Units 3 & 4 St Helens House, St Helens Way,

Thetford, Norfolk IP24 1HG

T: *01842 810833*

F: *01842 814751*

E: *sales@dqheating.com*

www.dqheating.com